EVERY 100' AND AT ENDS SET ON BALE PERPENDICULAR GOING UPSLOPE TO PREVENT WATER FLOWING ALONG THE CHECK.

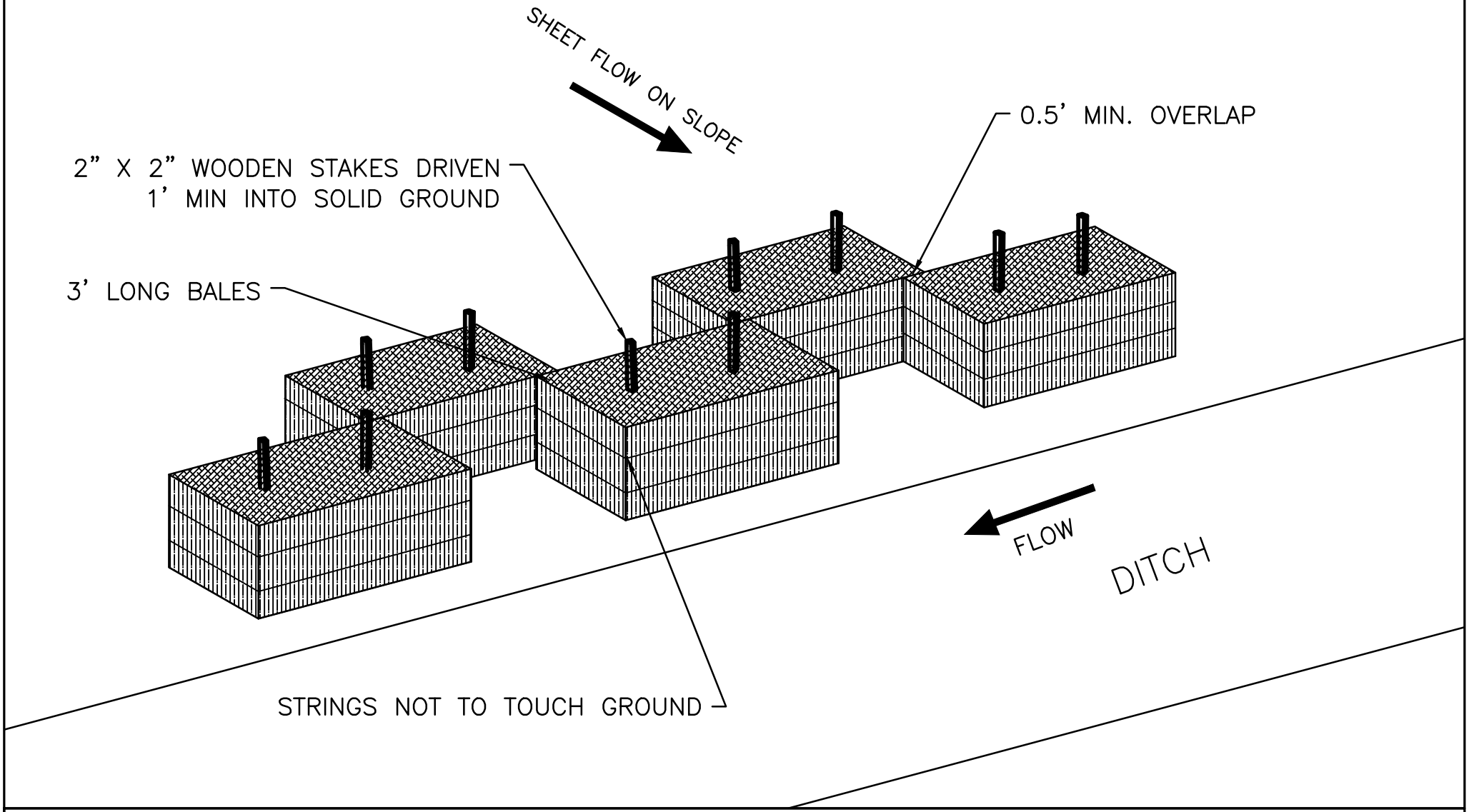

SILT BARRIER- BALES (AML 10-10-1)

KY DAML 1-2013

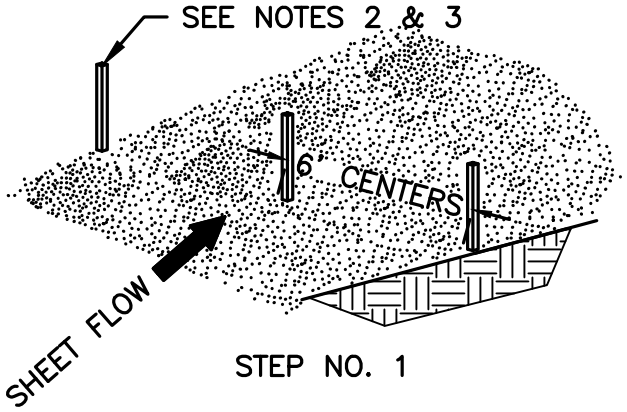

STEP NO. 1

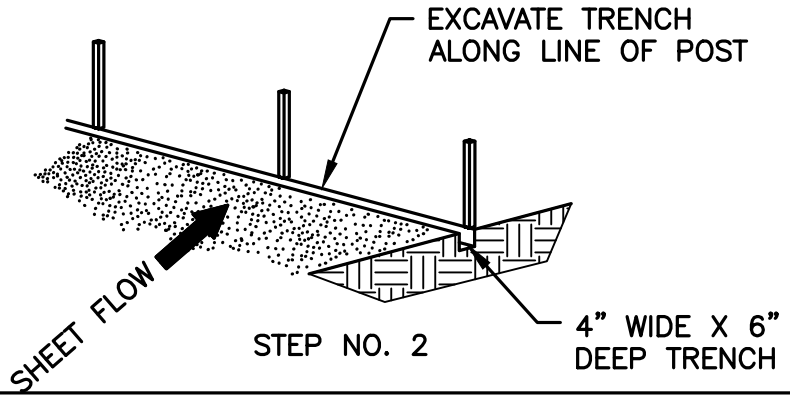

STEP NO. 2

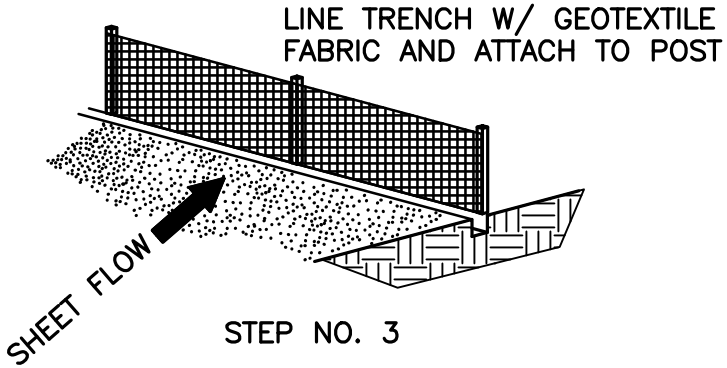

STEP NO. 3

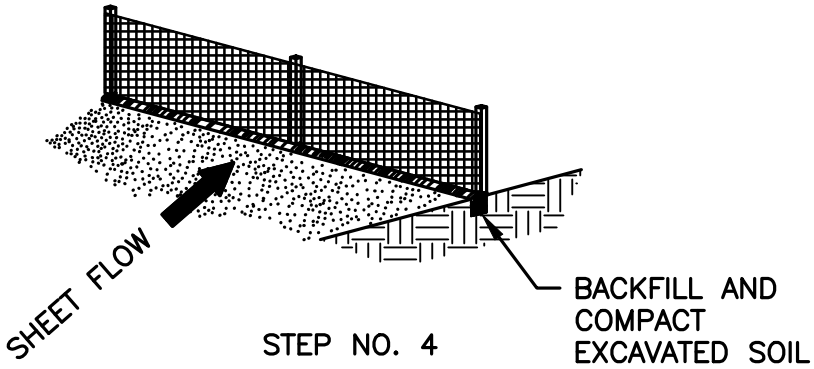

STEP NO. 4

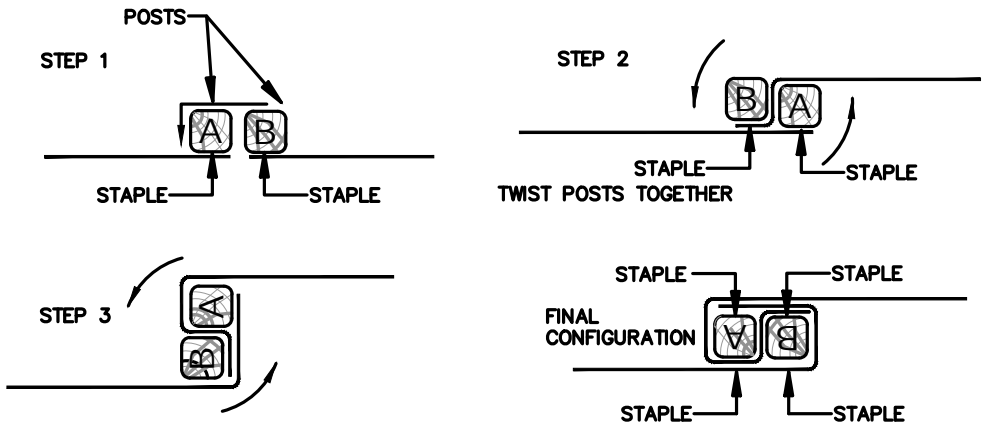

JOINING TWO ADJACENT SILT FENCE SECTIONS (TOP VIEW)

1. SEE AML SILT CONTROL TECHNICAL SPECIFICATION FOR MORE INFORMATION.
2. POST MAY BE WOODEN OR METAL T–SECTION.
3. POST SHALL BE SET 1'–4" DEEP
4. EVERY 100' AND AT ENDS TURN FENCE UPHILL FOR MIN. 3' INTO "J" HOOK. THEN TIE THE END OF A NEW SECTION OF FENCE INTO THE ORIGINAL FENCE OVERLAPPING THE HOOK BY 2'.
5. SILT FENCE SHALL BE REMOVED PRIOR TO THE COMPLETION OF THE PROJECT.

SILT BARRIER- FENCE (AML 10-10-2)

KY DAML 1–2013

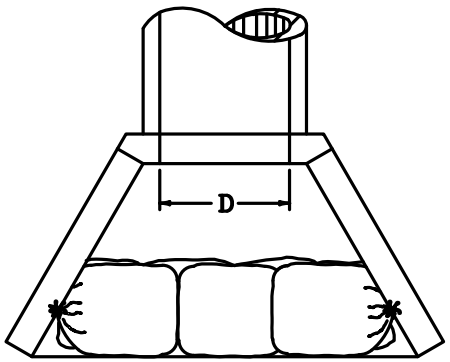

PLAN VIEW

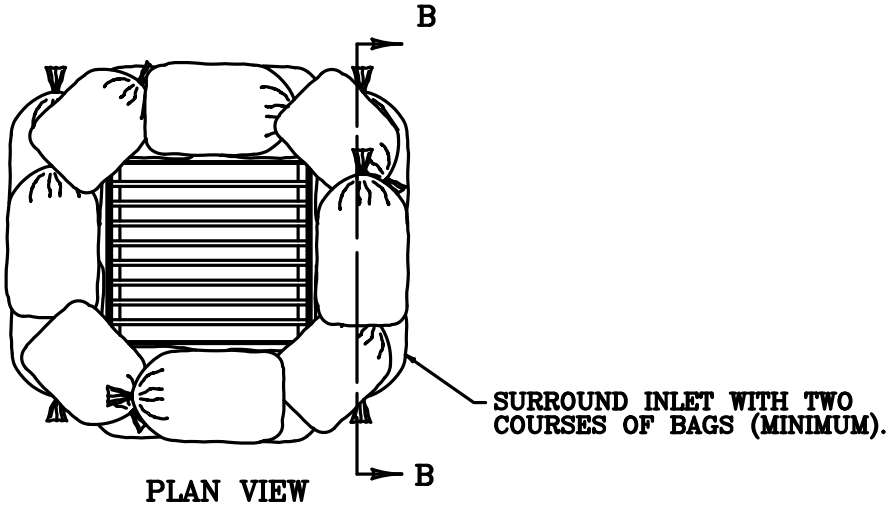

PLAN VIEW

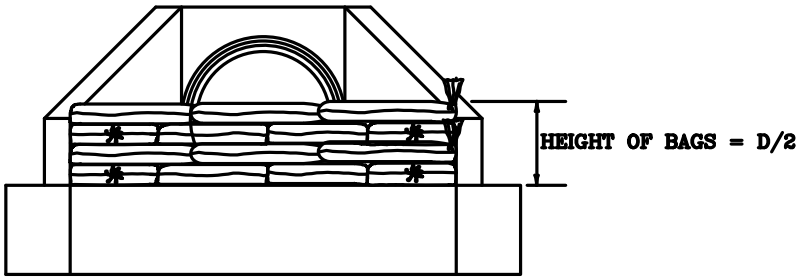

FRONT ELEVATION

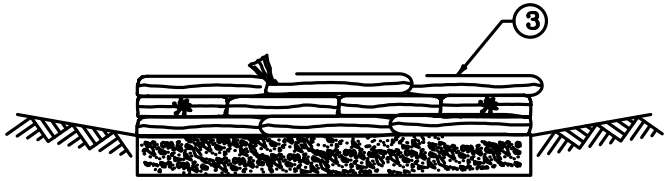

SECTION B~B

NOTES

1. INLET PROTECTION IS SUITABLE FOR USE IN BOTH PAVED AND UNPAVED AREAS.
2. THE HEIGHT REQUIREMENT IS WAIVED IN CASES WHERE IT WILL CREATE AN UNACCEPTABLE PONDING SITUATION.
3. INTERWEAVE BAG ENDS TO FILL GAPS BETWEEN BAGS.
4. CONSTRUCT 18" X 3" BAGS OF NON–WOVEN FILTER FABRIC. DOUBLE STITCH BAG SEAMS WITH 1 LB POLYESTER THREAD. ATTACH 1 TIE STRING TO EACH BAG. BAG OPENING SHALL BE ON THE 18" SIDE.
5. FILL BAGS WITH NO. 57 STONE BETWEEN ½ TO ⅔ FULL (50–60 LBS)
6. DO NOT USE IN BLUE LINE STREAMS.

SILT CHECK- GEOTEXTILE BAGS (AML 10-20-1)

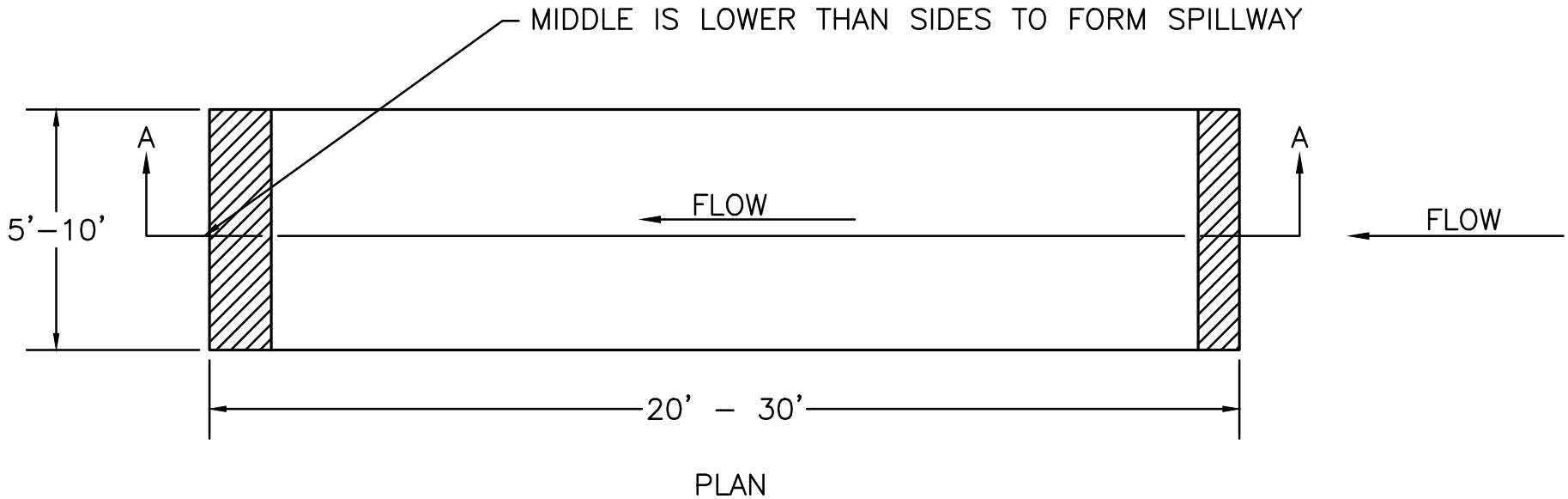

PLAN

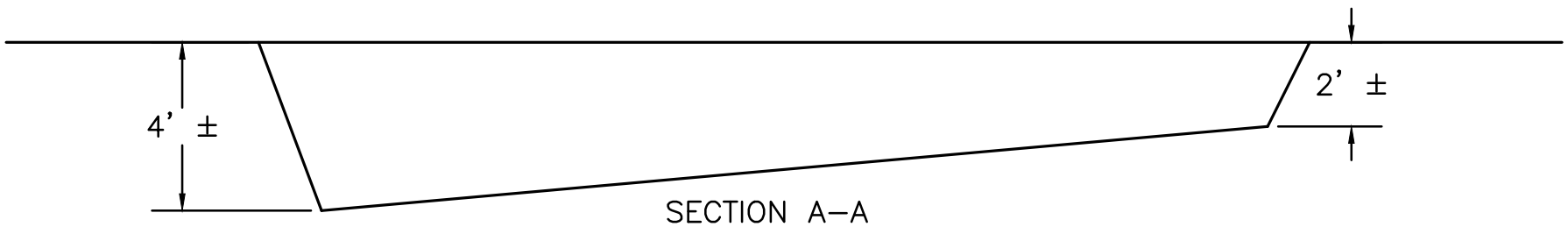

SECTION A–A

THE SIZE, SHAPE, AND LOCATION OF TRAPS MAY BE ADJUSTED FROM THAT SHOWN IN THE DRAWINGS, AS DIRECTED BY THE ENGINEER.

USE BAFFLES OR TURBIDITY CURTAINS TO ACHIEVE THE 3:1 FLOW LENGTH TO WIDTH RATIO WHEN NECESSARY (INCIDENTAL).

SILT TRAPS SHALL BE CLEANED WHEN THEY ARE APPROXIMATELY 50% FILLED WITH SEDIMENT. SILT TRAPS MAY REMAIN IN PLACE UNTIL ALL DISTURBED AREAS ARE SEEDED AND MULCHED AND APPROVED BY THE ENGINEER. ENGINEER MAY ELECT TO CONVERT TO PERMANENT TRAP, SEE 10–30–3).

USE WITH AML 70–20–3

SILT TRAP - TYPE A TEMPORARY (AML 10-30-1)

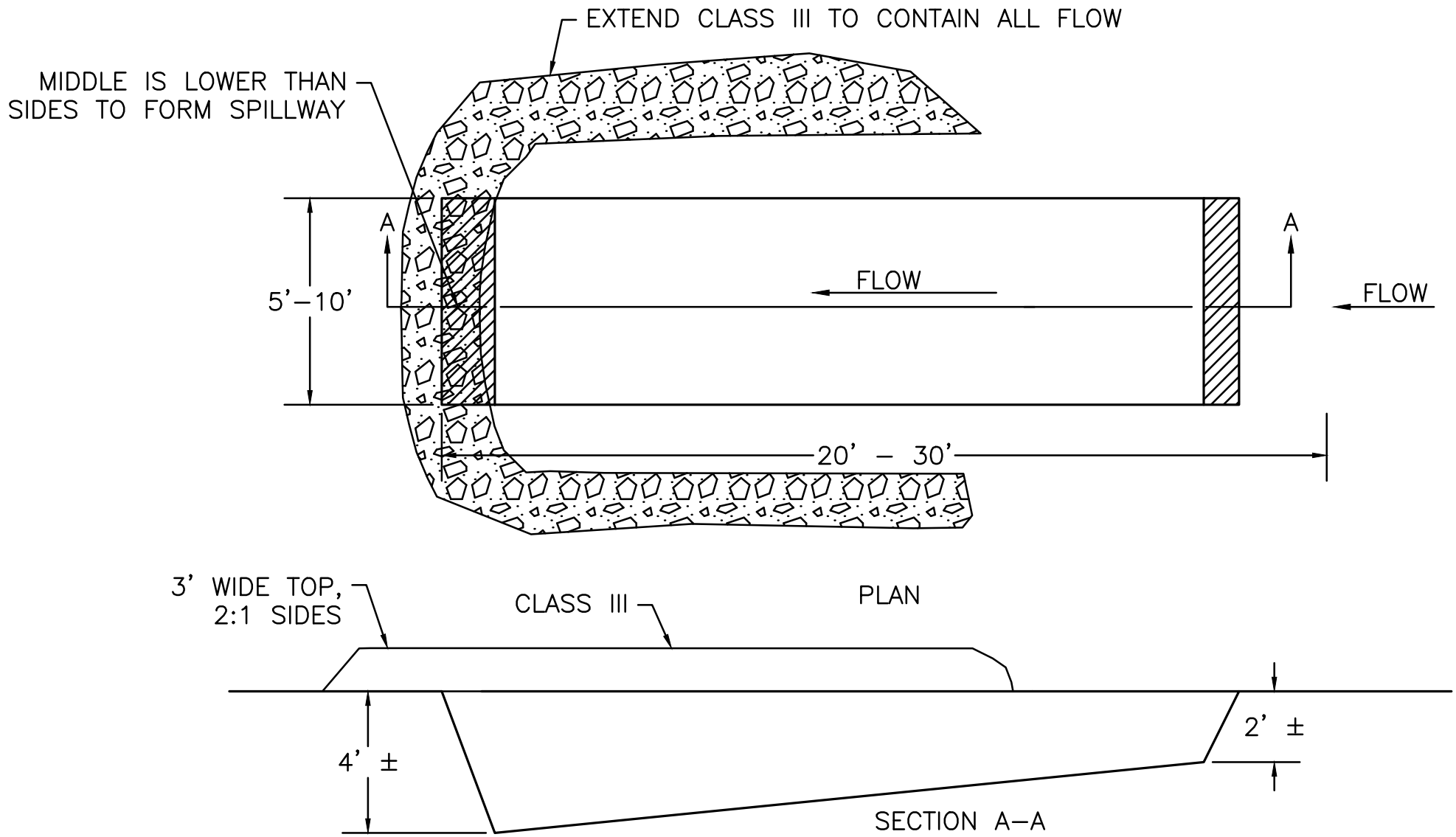

THE SIZE, SHAPE, AND LOCATION OF TRAPS MAY BE ADJUSTED FROM THAT SHOWN IN THE DRAWINGS, AS DIRECTED BY THE ENGINEER. USE BAFFLES OR TURBIDITY CURTAINS TO ACHIEVE THE 3:1 FLOW LENGTH TO WIDTH RATIO WHEN NECESSARY (INCIDENTAL).

SILT TRAPS SHALL BE CLEANED WHEN THEY ARE APPROXIMATELY 50% FILLED WITH SEDIMENT. SILT TRAPS MAY REMAIN IN PLACE UNTIL ALL DISTURBED AREAS ARE SEEDED AND MULCHED AND APPROVED BY THE ENGINEER. ENGINEER MAY ELECT TO CONVERT TO PERMANENT TRAP, SEE 10–30–3).

USE WITH AML 70–20–3

SILT TRAP- TYPE B TEMPORARY (AML 10-30-2)

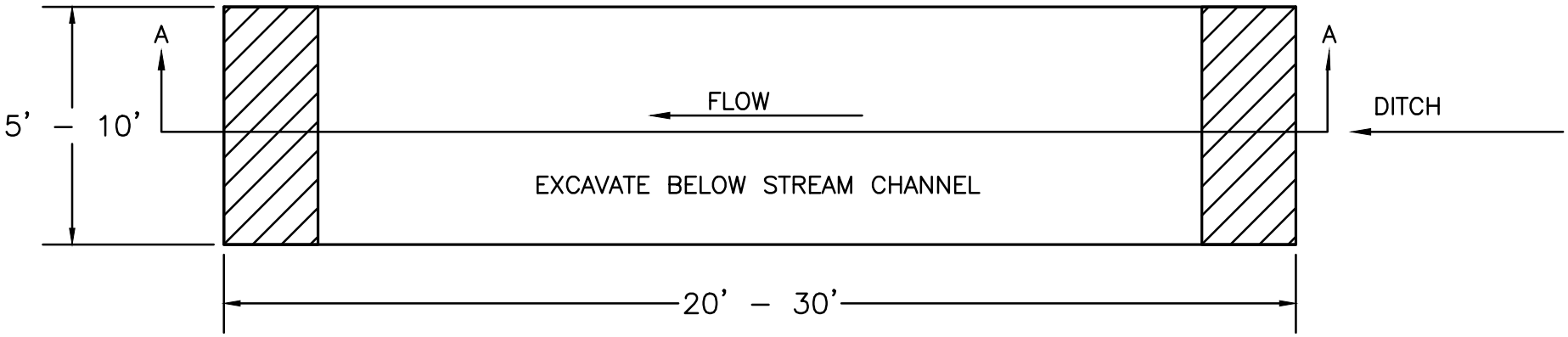

PLAN

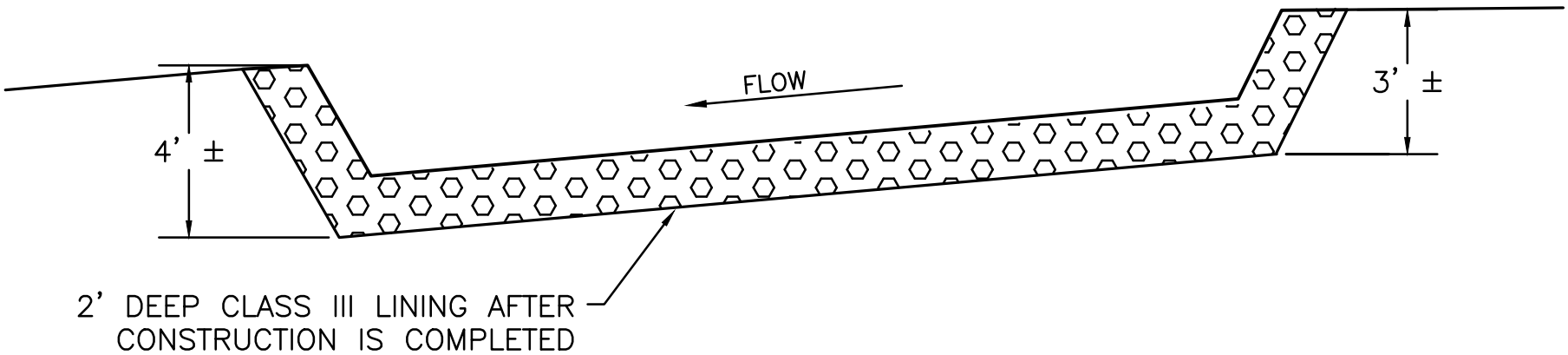

SECTION A–A

THESE ROCK LINED TRAPS MAY ALSO BE USED DURING CONSTRUCTION AS ENERGY DISSIPATERS.

THE SIZE, SHAPE, AND LOCATION OF TRAPS MAY BE ADJUSTED FROM THAT SHOWN IN THE DRAWINGS, AS DIRECTED BY THE ENGINEER. WHEN POSSIBLE MAINTAIN 3:1 LENTH:WIDTH RATIO.

CLEAN OUT WHEN THEY ARE APPROXIMATELY 50% FILLED WITH SEDIMENT.

USE WITH AML 70–20–3

SILT TRAP- TYPE A & B PERMANENT (AML 10-30-3)

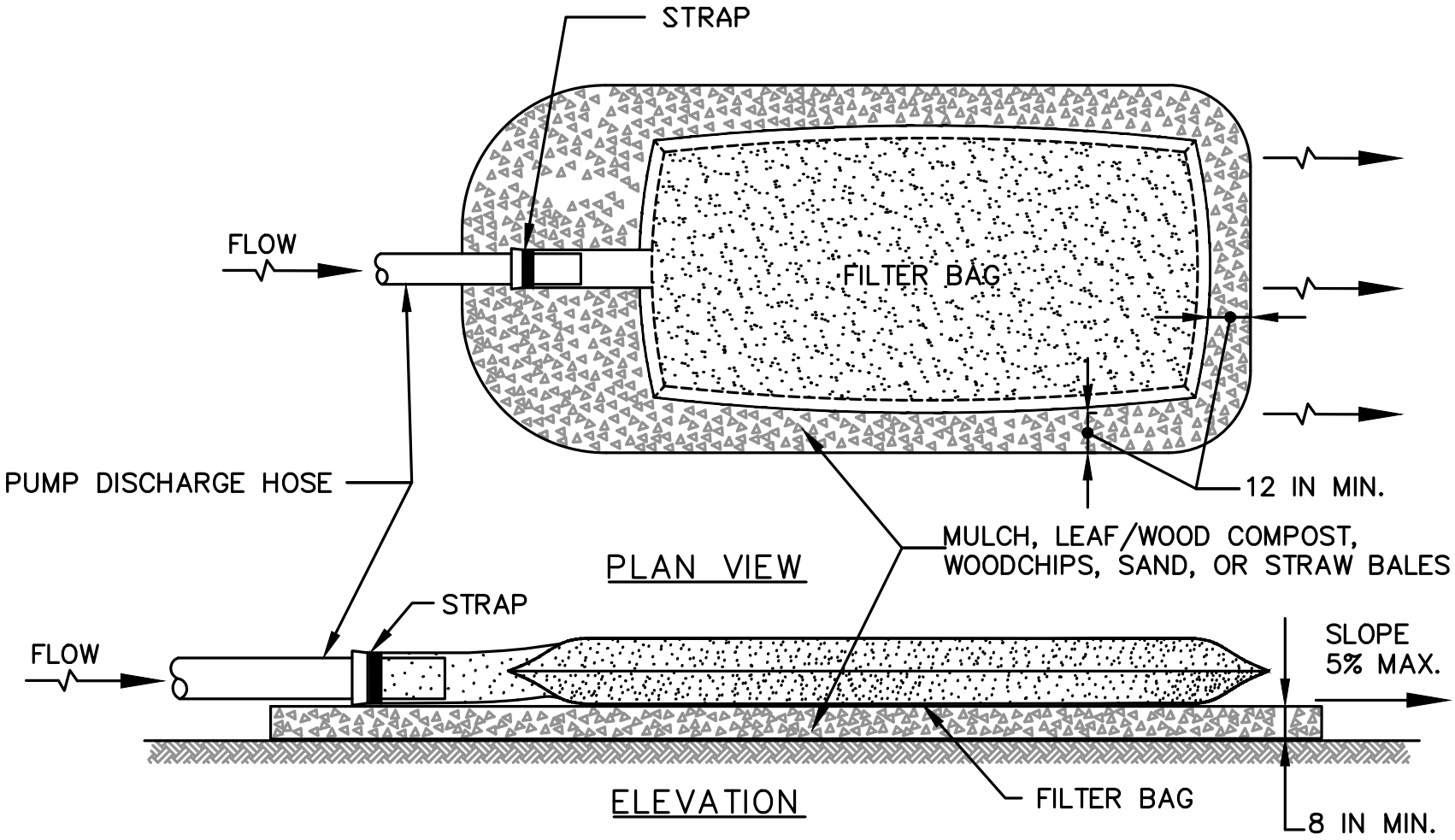

GEOTEXTILE FILTER BAG (AML 10-30-4)

KY DAML 1-2013

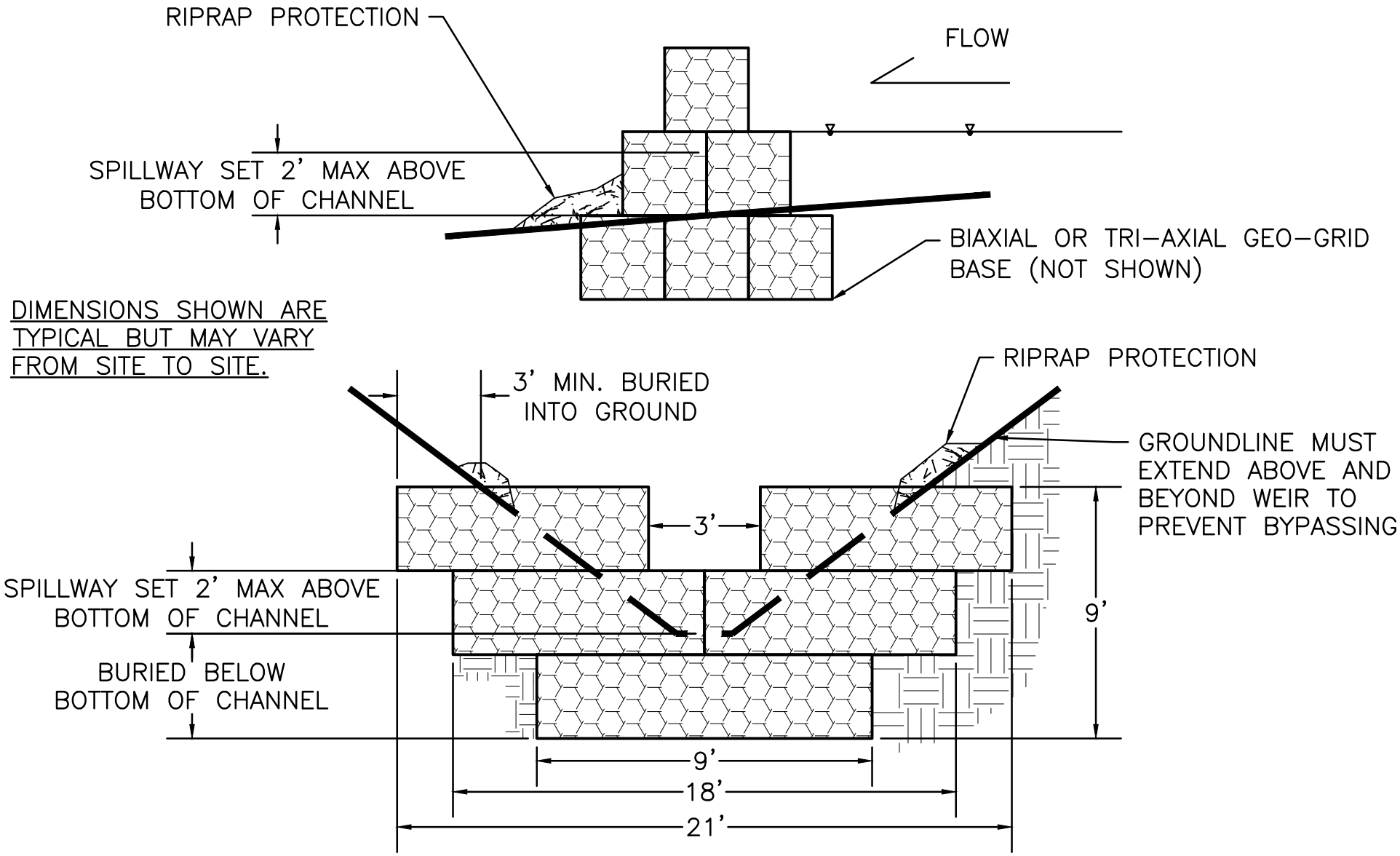

GABION WEIR (AML 10-40-1)

KY DAML 7-2017

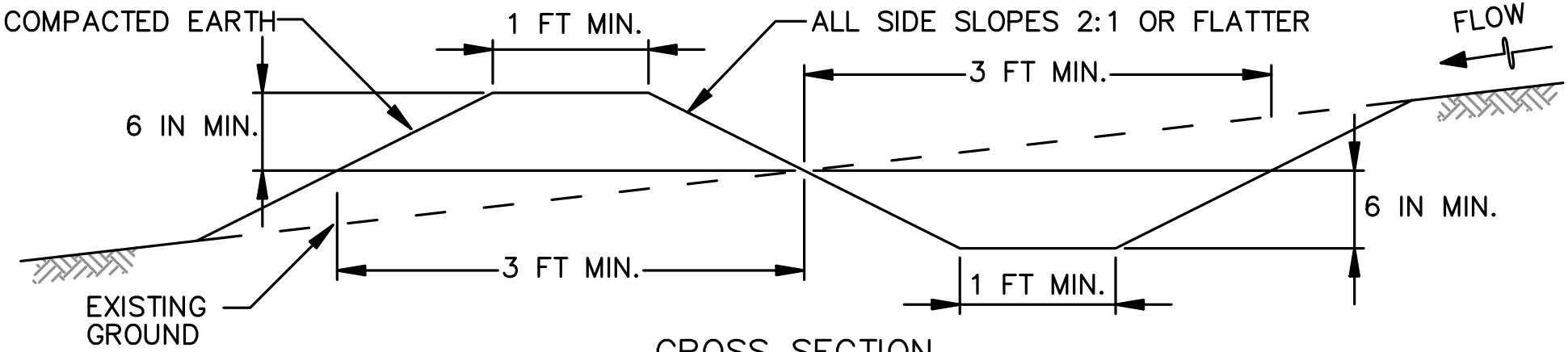

CROSS SECTION

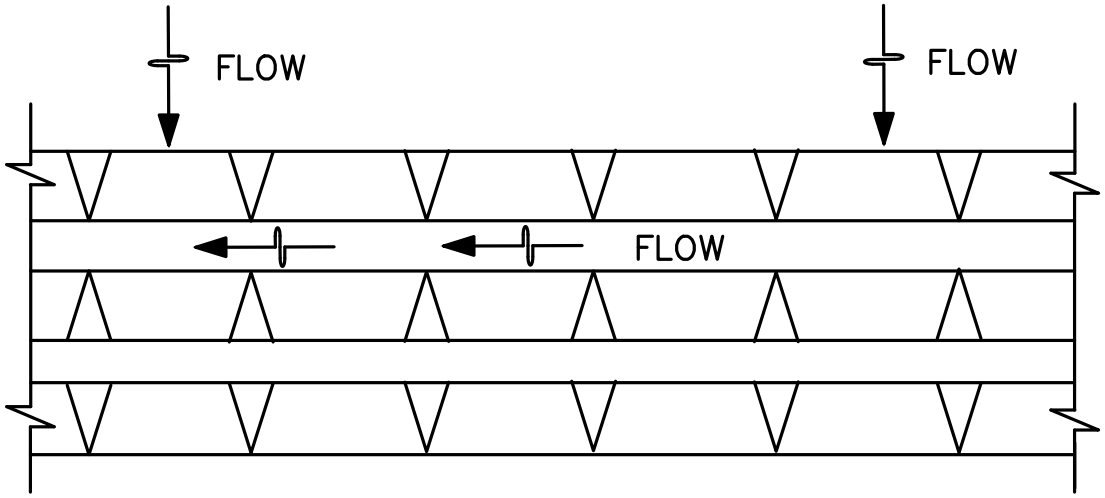

CONTINUOUS GRADE
0.5% MIN. TO 10% MAX.
SLOPE

PLAN VIEW

PERIMETER DIKE & SWALE (AML 10-50-1)

KY DAML 1–2013

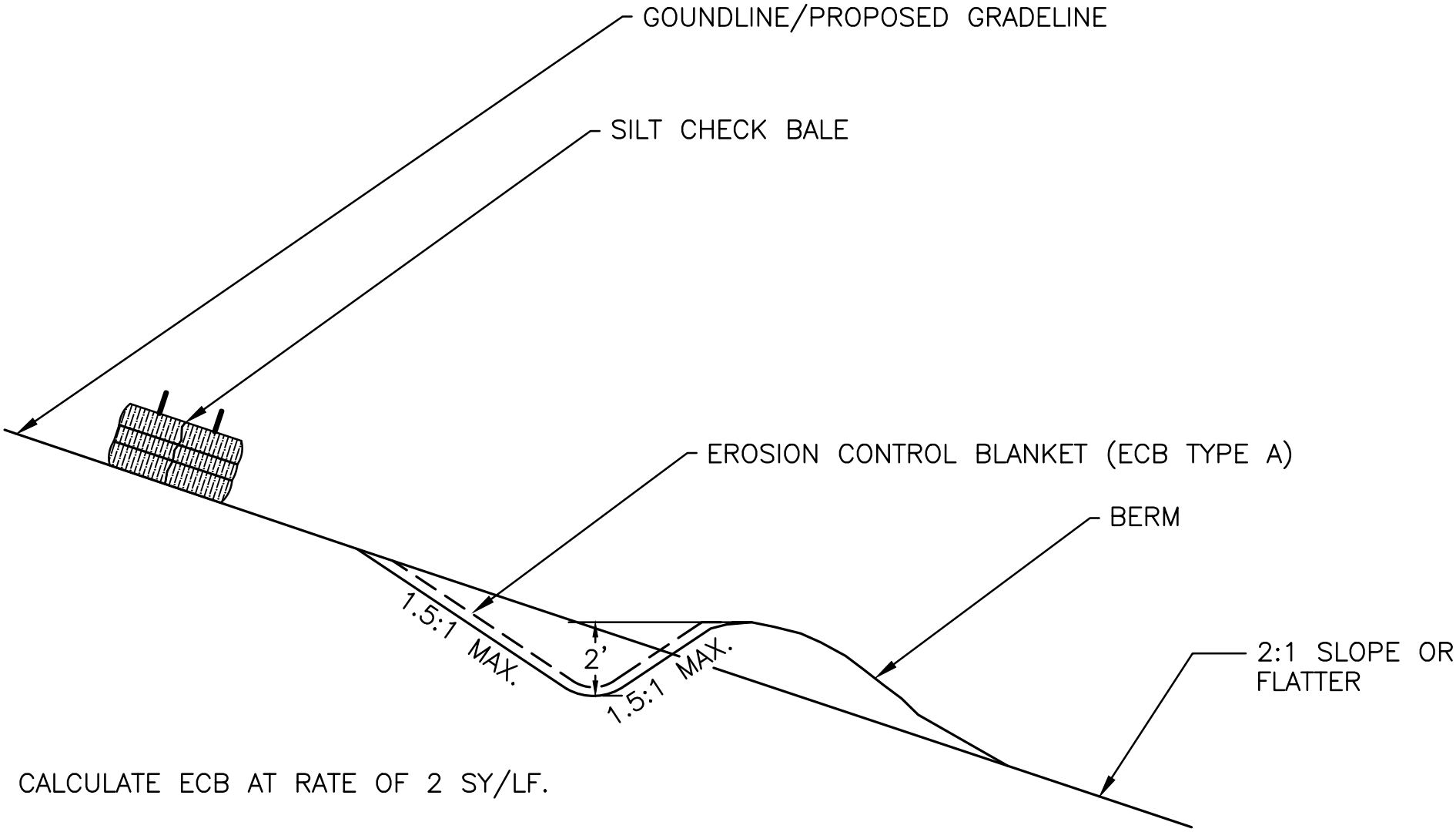

CALCULATE ECB AT RATE OF 2 SY/LF.

BED SLOPE OF DIVERSION CHANNEL SHOULD BE BETWEEN 3% –5% GRADE.

USE WITH AML 21–10–5

ECB DIVERSION W/ BERM (AML 21-10-1)

KY DAML 3–2014

BED SLOPE ALONG DIVERSION IS 3–5%.

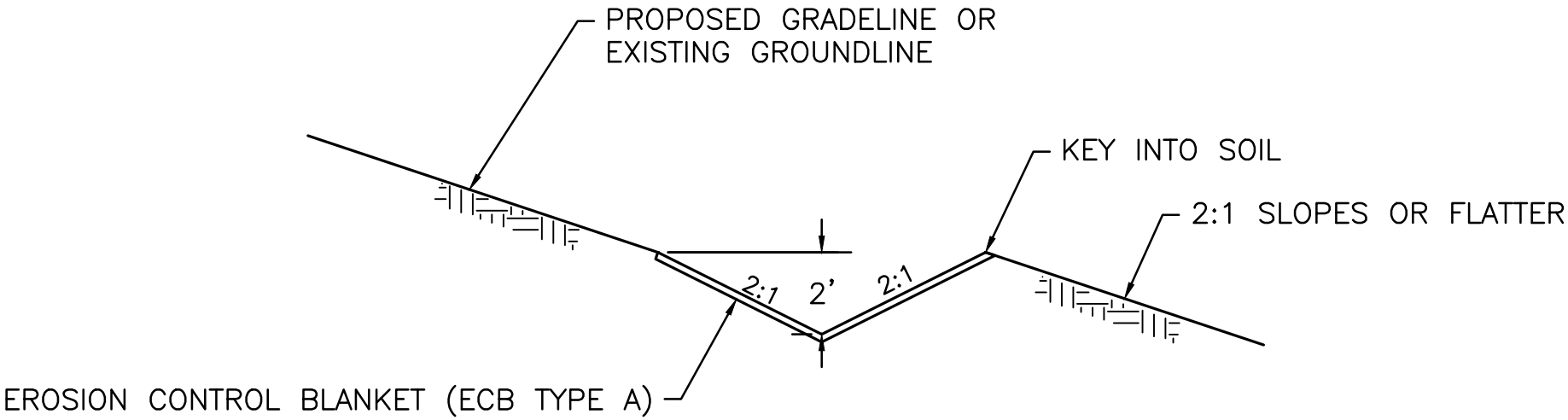

E.C.B. 1 S.Y./FT.

USE WITH AML 21–10–5

ECB DITCH- "V" (AML 21-10-2)

KY DAML 1–2013

ROCK ANCHORS SHALL BE PLACED AT ALL TRANSVERSE SEAMS AND MAX 100' INTERVALS.

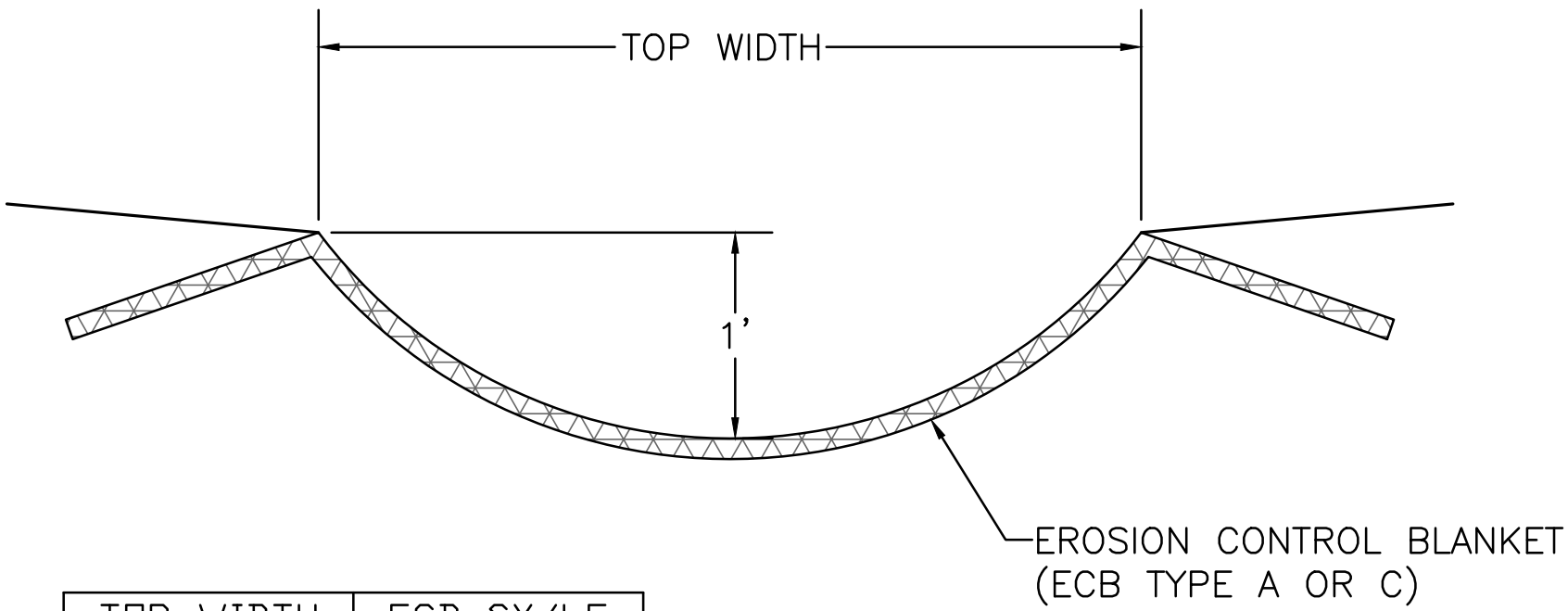

TOP WIDTH	ECB SY/LF
4'	1
10'	1.25
20'	1.5

EKY DITCHES USE TYPE A OR C
WKY DITCHES USE ONLY TYPE C

USE WITH AML 21–10–5, 21–70–1

ECB DITCH- SWALE (AML 21-10-3)

NOTE: SOIL AMENDMENTS AND SEED SHALL BE APPLIED BEFORE INSTALLING EROSION CONTROL BLANKETS.

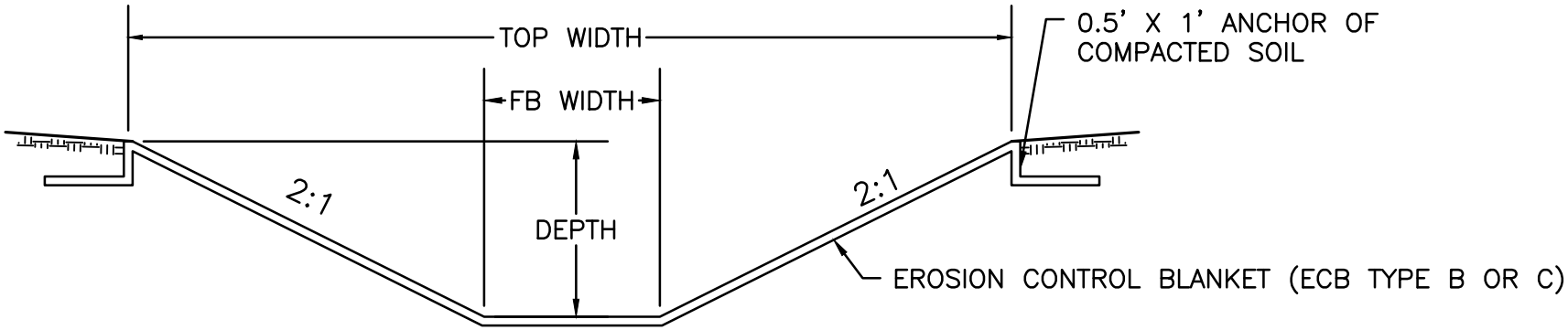

EKY DITCHES USE TYPE B OR C
WKY DITCHES USE ONLY TYPE C

FB WIDTH	DEPTH	TOP WIDTH	ECB (SQ YD/LF)
2'	1'	6'	0.85
2'	2'	10'	1.3
4'	2'	8'	1.5

USE WITH AML 21–10–5, 21–70–2

ECB DITCH- FLAT BOTTOM (AML 21-10-4)

KY DAML 12–2013

TYPE B ECB CHANNEL INSTALLATION

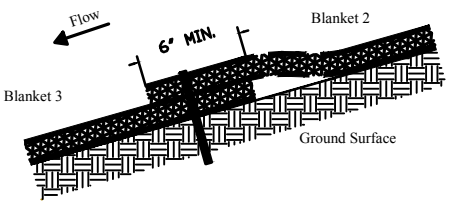

SEAM PROFILE

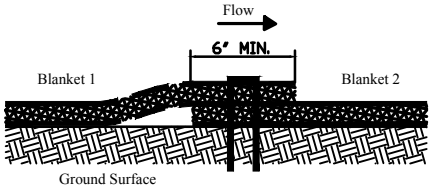

SEAM CROSS SECTION

*** Drawings Not to Scale**

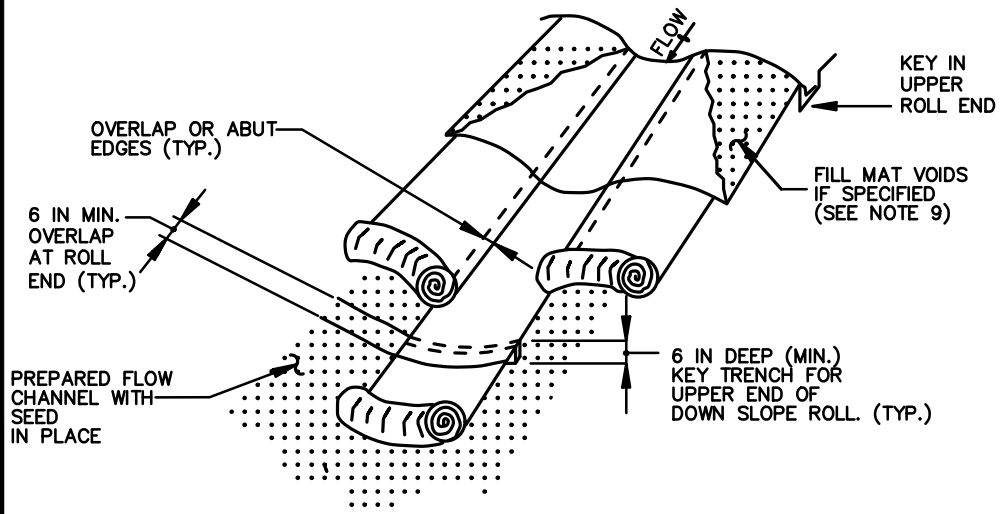

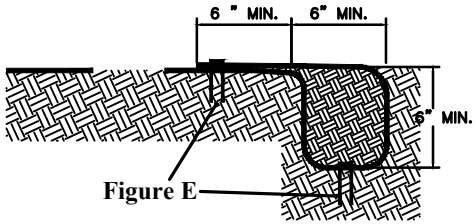

ANCHOR PROFILE

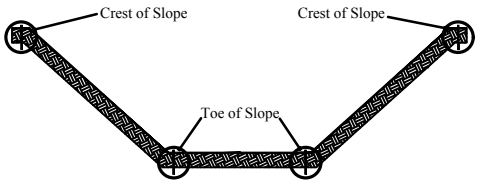

CRITICAL POINT SECURING

STEP 1 - SITE PREPARATION

PREPARE SITE TO DESIGN PROFILE AND GRADE. REMOVE DEBRIS, ROCKS, CLODS, ETC.. GROUND SURFACE SHOULD BE SMOOTH PRIOR TO INSTALLATION TO ENSURE BLANKET REMAINS IN CONTACT WITH SLOPE.

STEP 2 - SEEDING

SEEDING OF SITE SHOULD BE CONDUCTED TO DESIGN REQUIREMENTS OR TO FOLLOW LOCAL OR STATE SEEDING REQUIREMENTS AS NECESSARY.

STEP 3 - STAPLE SELECTION

SECURE BLANKET USING STEEL STAPLES OR WOODEN STAKES. INSTALLATION IN ROCKY, SANDY OR OTHER LOOSE SOIL MAY REQUIRE LONGER STAPLES.

STEP 4 - EXCAVATE ANCHOR TRENCH AND SECURE BLANKET

EXCAVATE A TRENCH ALONG THE TOP OF THE CHANNEL SIDE SLOPES AND THE UPSTREAM TERMINAL END OF THE CHANNEL TO SECURE THE EDGES OF THE BLANKET. THE TRENCH SHOULD RUN ALONG THE LENGTH AND WIDTH OF THE INSTALLATION, BE 6 IN. WIDE AND 6 IN. DEEP MIN. STAPLE BLANKET ALONG BOTTOM OF TRENCH, FILL WITH COMPACTED SOIL, OVERLAP BLANKET TOWARDS TOE OF SLOPE AND SECURE WITH ROW OF STAPLES (SHOWN IN FIGURES A, E AND F).

STEP 5 - SECURE BODY OF BLANKET

ROLL BLANKET DOWN SLOPE FROM ANCHOR TRENCH. STAPLE BODY OF BLANKET FOLLOWING THE PATTERN. LEAVE END OF BLANKET UNSTAPLED TO ALLOW FOR OVERLAP. PLACE DOWNSTREAM BLANKET UNDERNEATH UPSTREAM BLANKET TO FORM SHINGLE PATTERN. MORE STAPLES MAY BE REQUIRED TO ENSURE BLANKET IS SUFFICIENTLY SECURED TO RESIST MOWERS AND FOOT TRAFFIC AND TO ENSURE BLANKET IS IN CONTACT WITH SOIL SURFACE OVER THE ENTIRE AREA OF BLANKET. FURTHER, CRITICAL POINTS REQUIRE ADDITIONAL STAPLES. .

STEP 6 - CONTINUE ALONG SLOPE - COMPLETE INSTALLATION

OVERLAP ADJACENT BLANKETS AND REPEAT STEP 5. SECURE TOE OF SLOPE USING STAPLING PATTERN SHOWN IN FIGURE E. SECURE EDGES OF INSTALLATION BY STAPLING AT 1.0' INTERVALS ALONG THE TERMINAL EDGE.

EXACT STAPLE SPACING MAY DIFFER BETWEEN MANUFACTURER AND THIS DETAIL.

ECB CHANNEL INSTALLATION (AML 21-10-5)

1. EXCAVATE DITCH TO DEPTH WHERE WATER RUNS OVER ROCK ON SIDES INTO DITCH.
2. DITCHES <10% ARE UNDERLAIN WITH GEO–GRID UNLESS ON BEDROCK.
3. DITCHES OVER ACIDIC MATERIAL WILL HAVE 2' EARTHEN BASE AND MAY HAVE 3" LIMESTONE BASE.
4. DITCHES >4' DEPTH SHOULD HAVE SIDE SLOPES ON 3:1 COVERED WITH ECB INSTEAD OF ROCK.

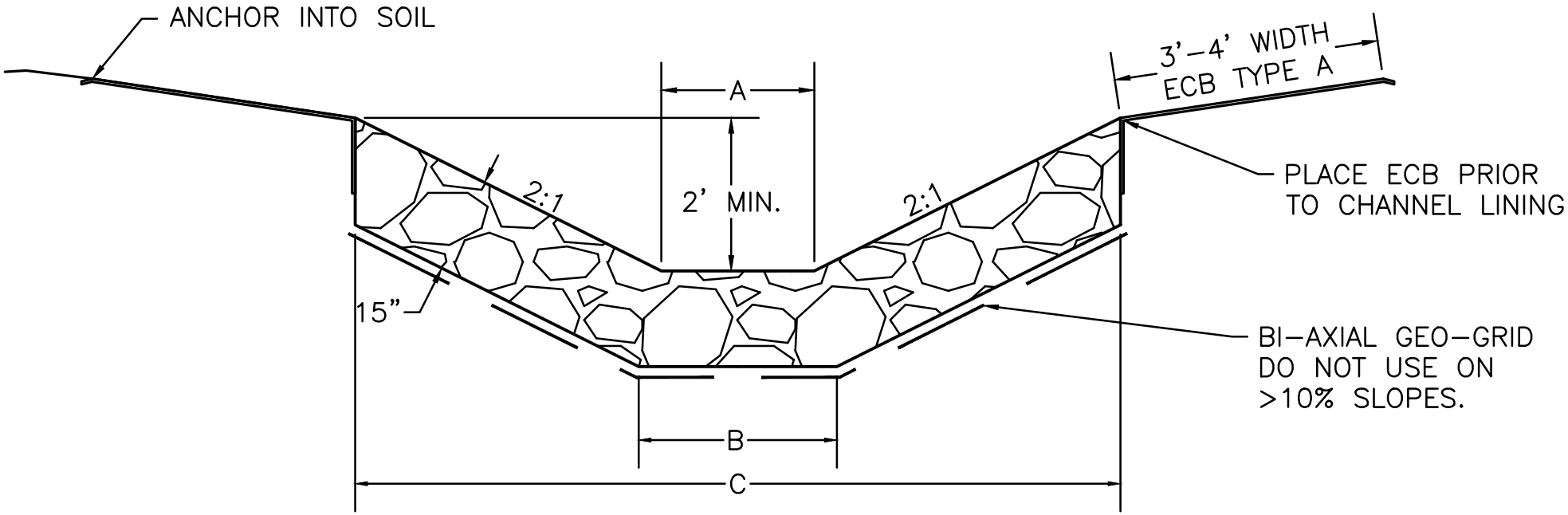

BASED ON 2' DEPTH

"A" FLAT BOTTOM WIDTH (LF)	"B" (LF)	"C" (LF)	CLASS II/III (TON/LF)	GEO–GRID (SQ YD/LF)	ECB (SQ YD/LF)
2	2.6	10	0.76	1.55	1
4	4.6	12	0.90	1.75	1

USE WITH AML 21–20–3

CLASS II DITCH- FLAT BOTTOM (AML 21-20-1)

KY DAML 7–2017

1. EXCAVATE DITCH TO DEPTH WHERE WATER RUNS OVER ROCK ON SIDES INTO DITCH.
2. DITCHES <10% ARE UNDERLAIN WITH GEO–GRID UNLESS ON BEDROCK.
3. DITCHES OVER ACIDIC MATERIAL WILL HAVE 2' EARTHEN BASE AND MAY HAVE 3" LIMESTONE BASE.
4. DITCHES >4' DEPTH SHOULD HAVE SIDE SLOPES ON 3:1 COVERED WITH ECB INSTEAD OF ROCK.

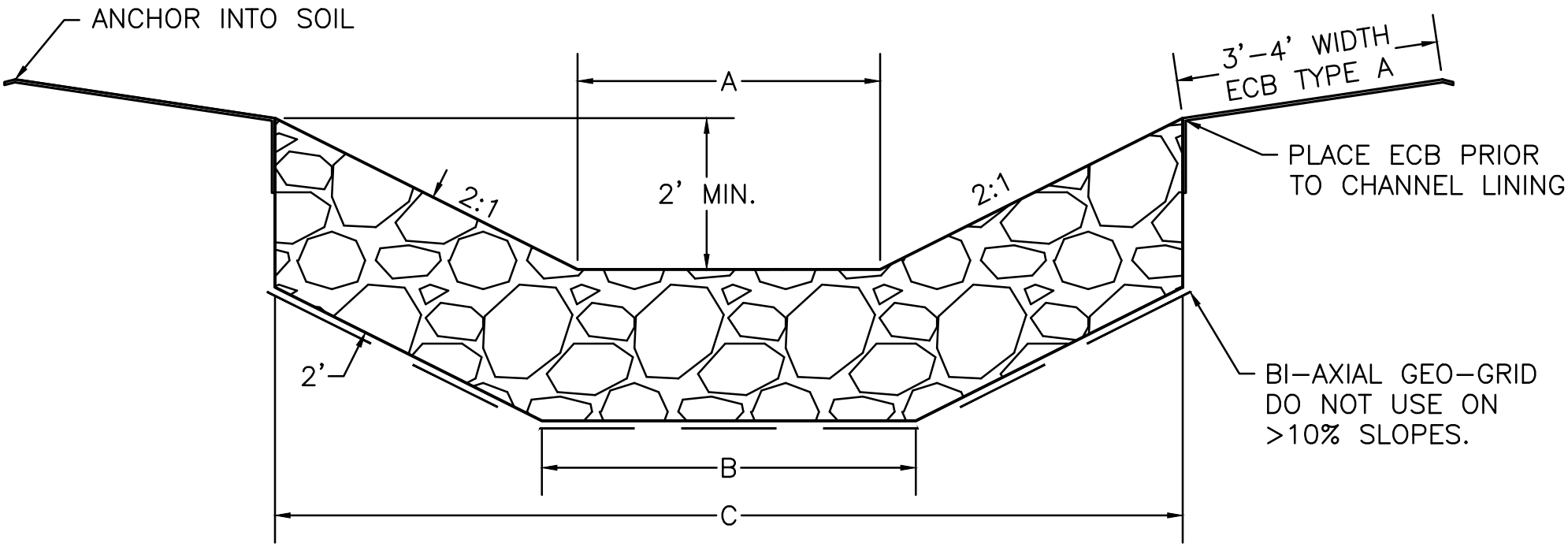

BASED ON 2' DEPTH

"A" FLAT BOTTOM SIZE (LF)	"B" (LF)	"C" (LF)	C + EARTH BASE (LF)*	CLASS II/III (TON/LF)	GEO–GRID (SQ YD/LF)	ECB (SQ YD/LF)
4	4.9	10	15.9	1.65	2.40	1
6	6.9	12	19.9	1.88	2.60	1
8	8.9	14	23.9	2.10	2.80	1

* THIS IS FOR DITCHES WITH EARTHEN COVER OVER ACIDIC UNDERLYING MATERIALS.

USE WITH AML 21–20–3

CLASS III DITCH- FLAT BOTTOM (AML 21-20-2)

KY DAML 7–2017

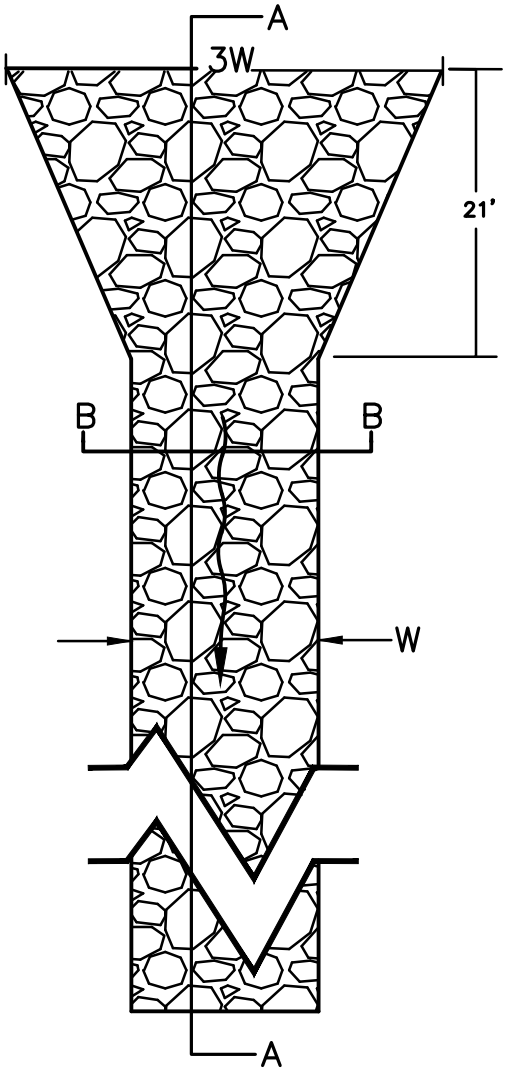

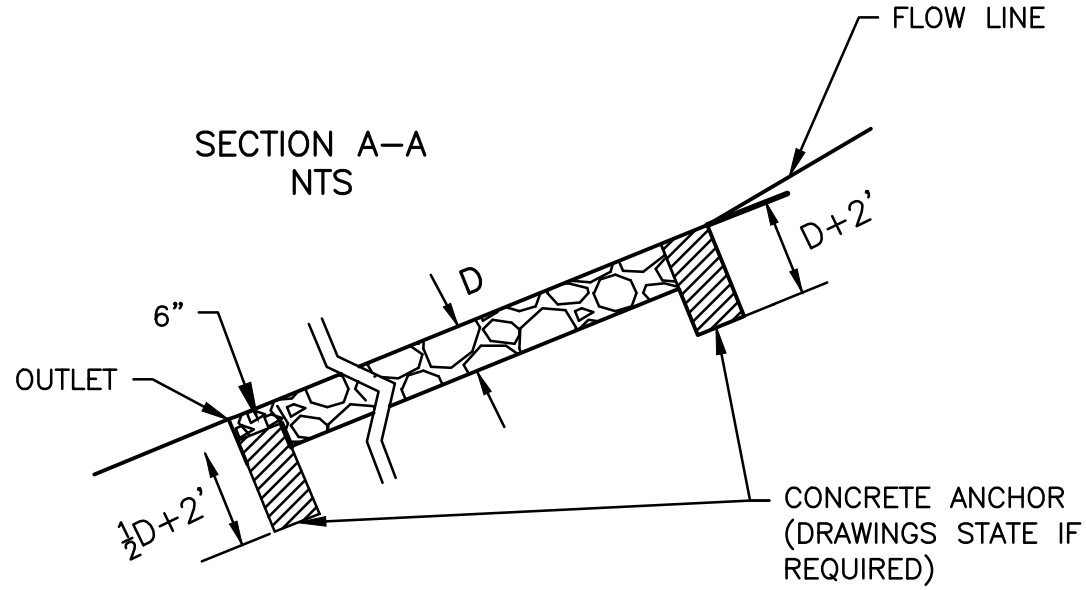

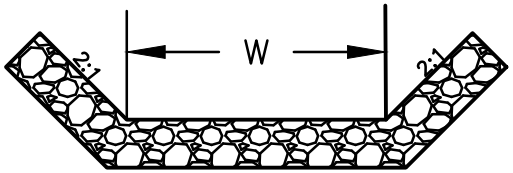

SECTION B–B
NTS

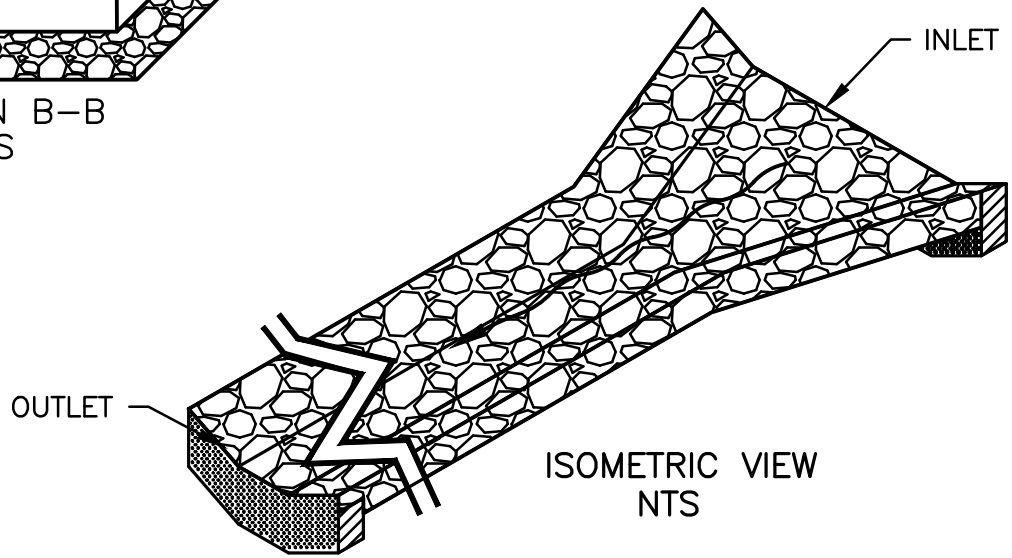

ISOMETRIC VIEW
NTS

W= WIDTH OF BOTTOM OF DITCH

D= DEPTH OF CHANNEL LINING
(CLASS II/III OR GABION)

INLET AND OUTLET DITCH TREATMENT (AML 21-20-3)

KY DAML 1–2013

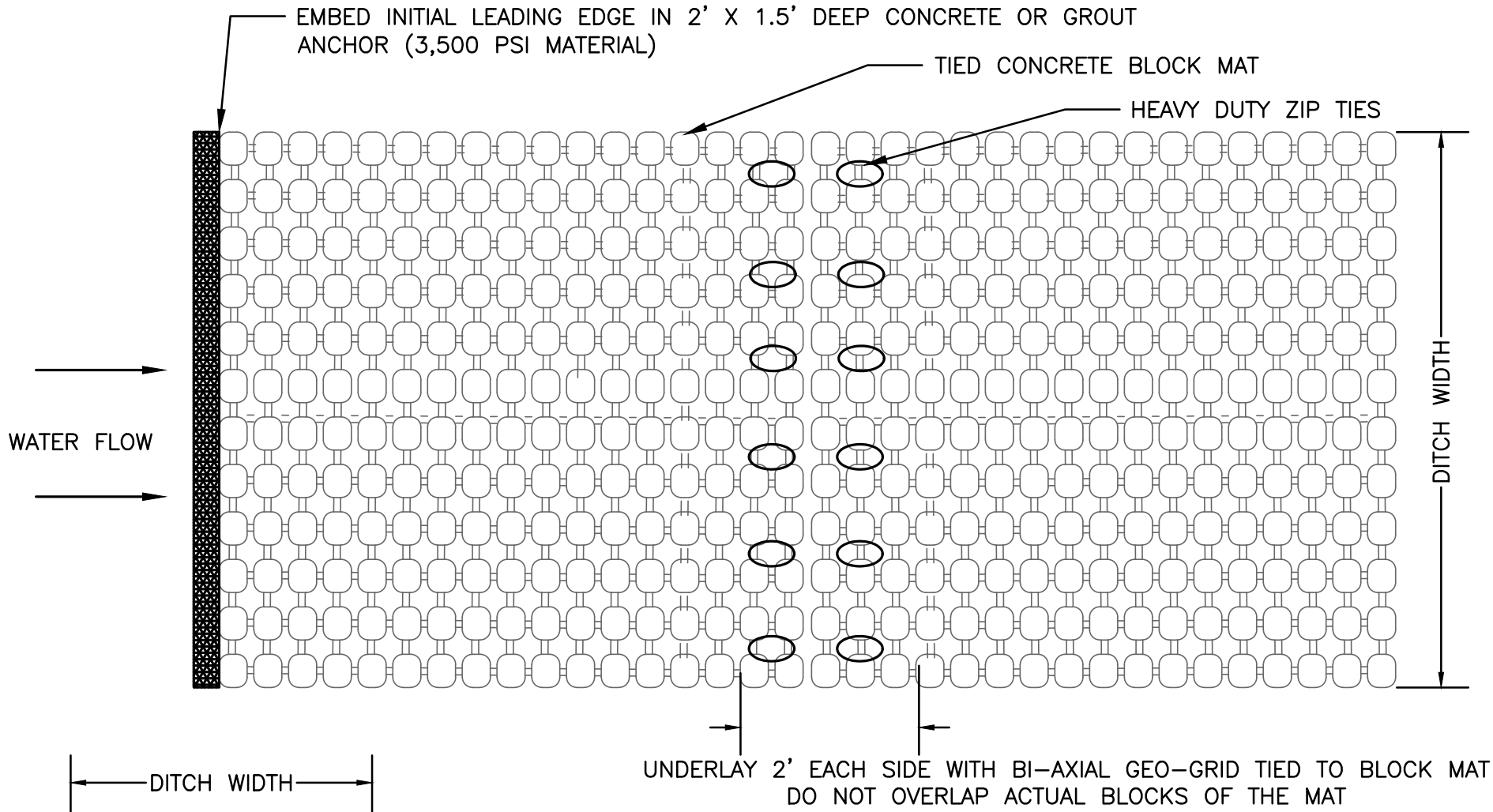

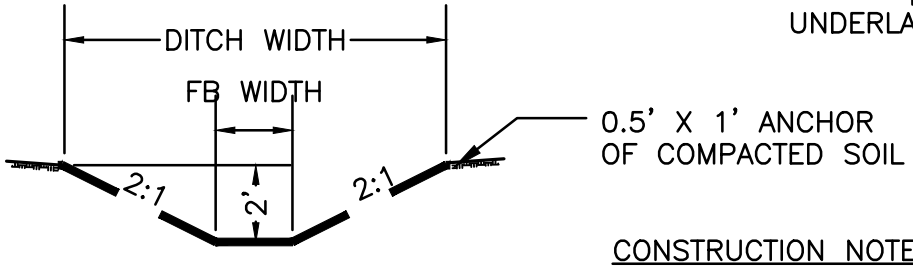

CONSTRUCTION NOTES:

1. ENGINEER MAY ELECT TO ADD "U" SHAPED REBAR ANCHORS SET MIN. 2' DEEP (INCIDENTAL).
2. ENGINEER MAY REQUIRE INTERMEDIATE CONCRETE/GROUT ANCHORS 2' WIDE X 1.5' DEEP WIDTH OF DITCH. SEE BID ITEM DESCRIPTION IF INCIDENTAL OR SEPARATE BID ITEMS.
3. NOT RECOMMENDED FOR SLOPES STEEP THAN 2.1.

CONCRETE BLOCK- TIED MAT (AML 21-30-1)

- GEO–GRID SHALL ONLY BE PLACED UNDER ALL DITCHES WITH CHANNELS FLATTER THAN 10% AND NOT ON BEDROCK.
- INSTALL GABION ANCHORS (21–70–3) ON SLOPES >10%.

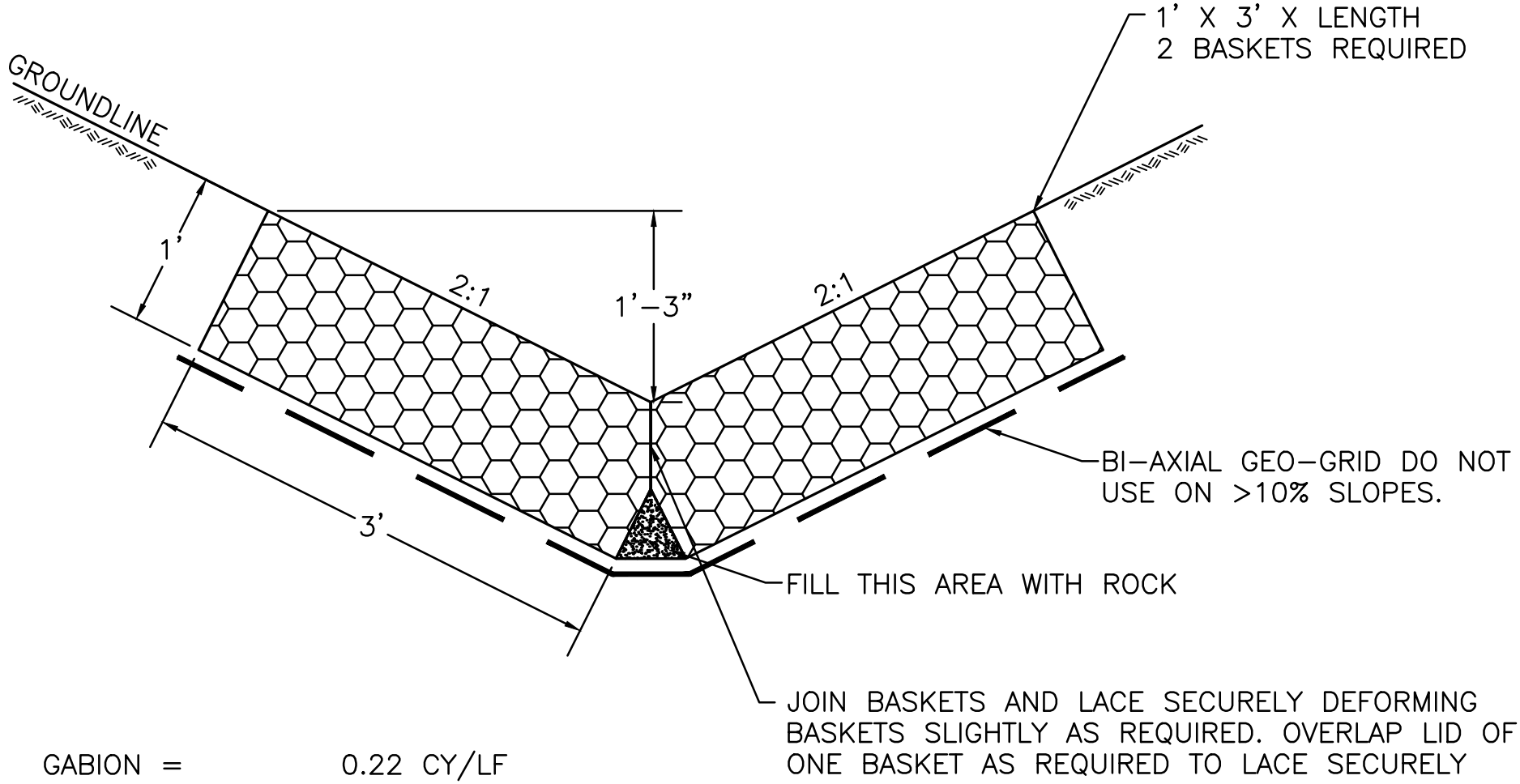

GABION = 0.22 CY/LF
GEO–GRID = 1.1 SY/LF

USE WITH AML 70–30–1

GABION DITCH- "V" (AML 21-40-1)

KY DAML 1–2013

- GEO–GRID SHALL ONLY BE PLACED UNDER ALL DITCHES WITH CHANNELS FLATTER THAN 10% AND NOT ON BEDROCK.
- INSTALL GABION ANCHORS (21–70–3) ON SLOPES >10%.

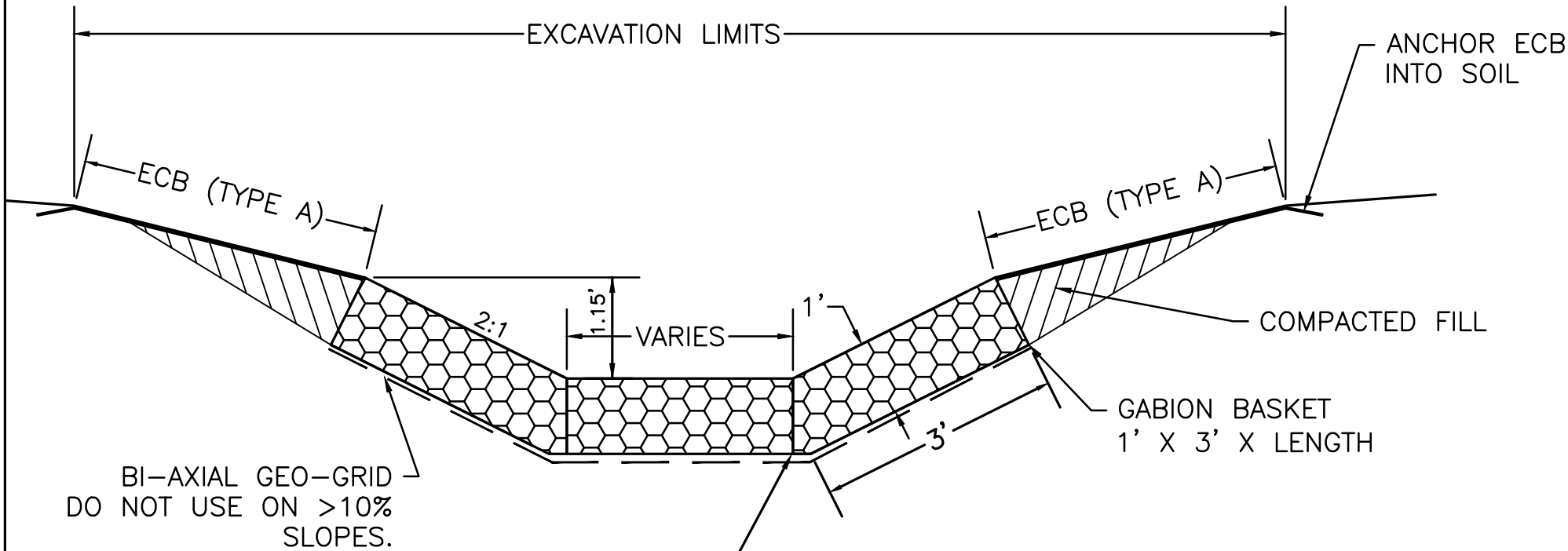

JOIN BASKETS AND OVERLAP LID OF ONE BASKET, LACE SECURELY, DEFORMING BASKETS SLIGHTLY AS REQUIRED

QUANTITIES

GABIONS	GEO–GRID
3' WIDE= 0.35 CY/LF	1.00 SY/LF
6' WIDE= 0.48 CY/LF	1.33 SY/LF
9' WIDE= 0.61 CY/LF	1.67 SY/LF

ECB = 1.00 SY/LF

USE WITH AML 21–70–3 & 70–30–1

GABION DITCH- TRAPEZOIDAL 3',6',9' WIDTH (AML 21-40-2)

KY DAML 1–2013

- GEO–GRID SHALL ONLY BE PLACED UNDER ALL DITCHES WITH CHANNELS FLATTER THAN 10% AND NOT ON BEDROCK.
- INSTALL GABION ANCHORS (21–70–3) ON ALL SLOPES >10%.
- PLACE FILTER FABRIC BETWEEN ROCK AND SOIL CONTACT ON SIDES.
- USE CONCRETE HEADWALL WHEN GABION DITCHES TIE INTO A PIPE. BASE OF HEADWALL EXTENDS 1' BELOW BASE OF GABION.

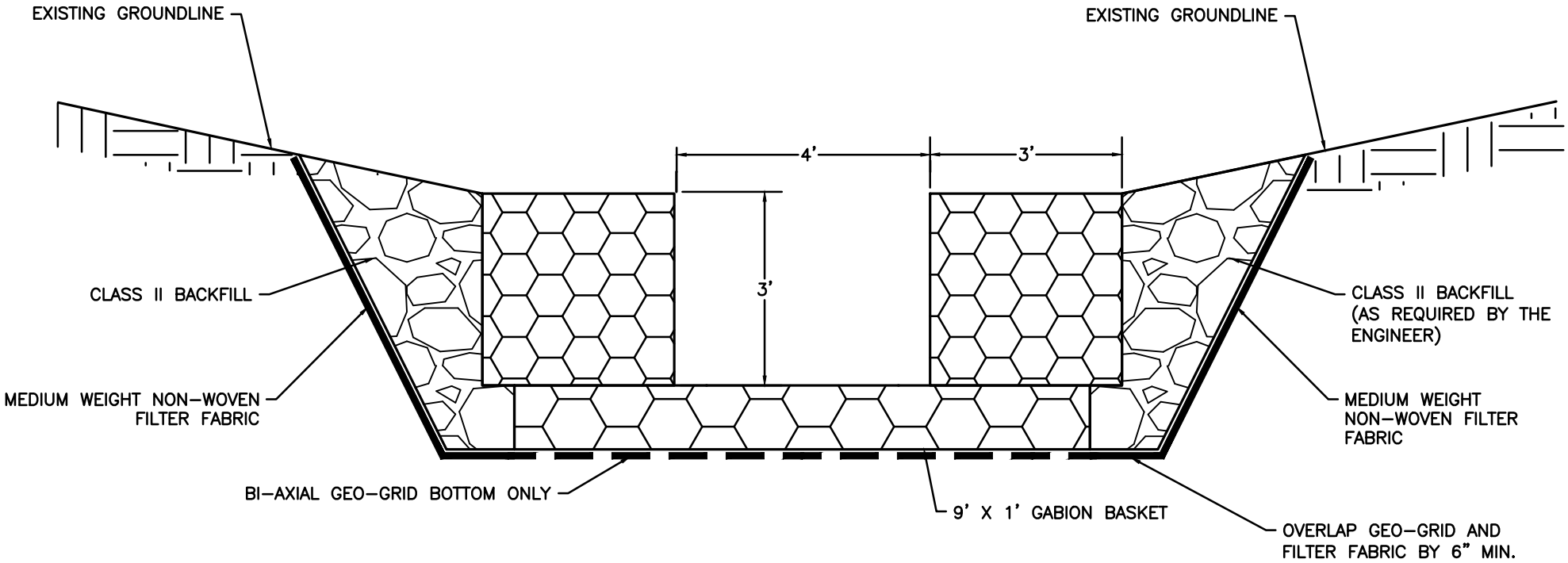

QUANTITIES

GABION	1.00 CY/LF
GEO–GRID	1.11 SY/LF
CLASS II BACKFILL	0.84 TON/LF
ECB (TYPE A)	1.00 SY/LF
FILTER FABRIC	1.5 SY/LF

USE WITH AML 21–70–3 & 70–30–1

GABION DITCH- RECTANGULAR 4' FLAT BOTTOM EVEN SIDE HEIGHTS (AML 21-40-3)

- GEO–GRID SHALL ONLY BE PLACED UNDER ALL DITCHES WITH CHANNELS FLATTER THAN 10% AND NOT ON BEDROCK.
- INSTALL GABION ANCHORS (21–70–3) ON ALL SLOPES >10%.
- PLACE FILTER FABRIC BETWEEN ROCK AND SOIL CONTACT ON SIDES.
- USE CONCRETE HEADWALL WHEN GABION DITCHES TIE INTO A PIPE. BASE OF HEADWALL EXTENDS 1' BELOW BASE OF GABION.

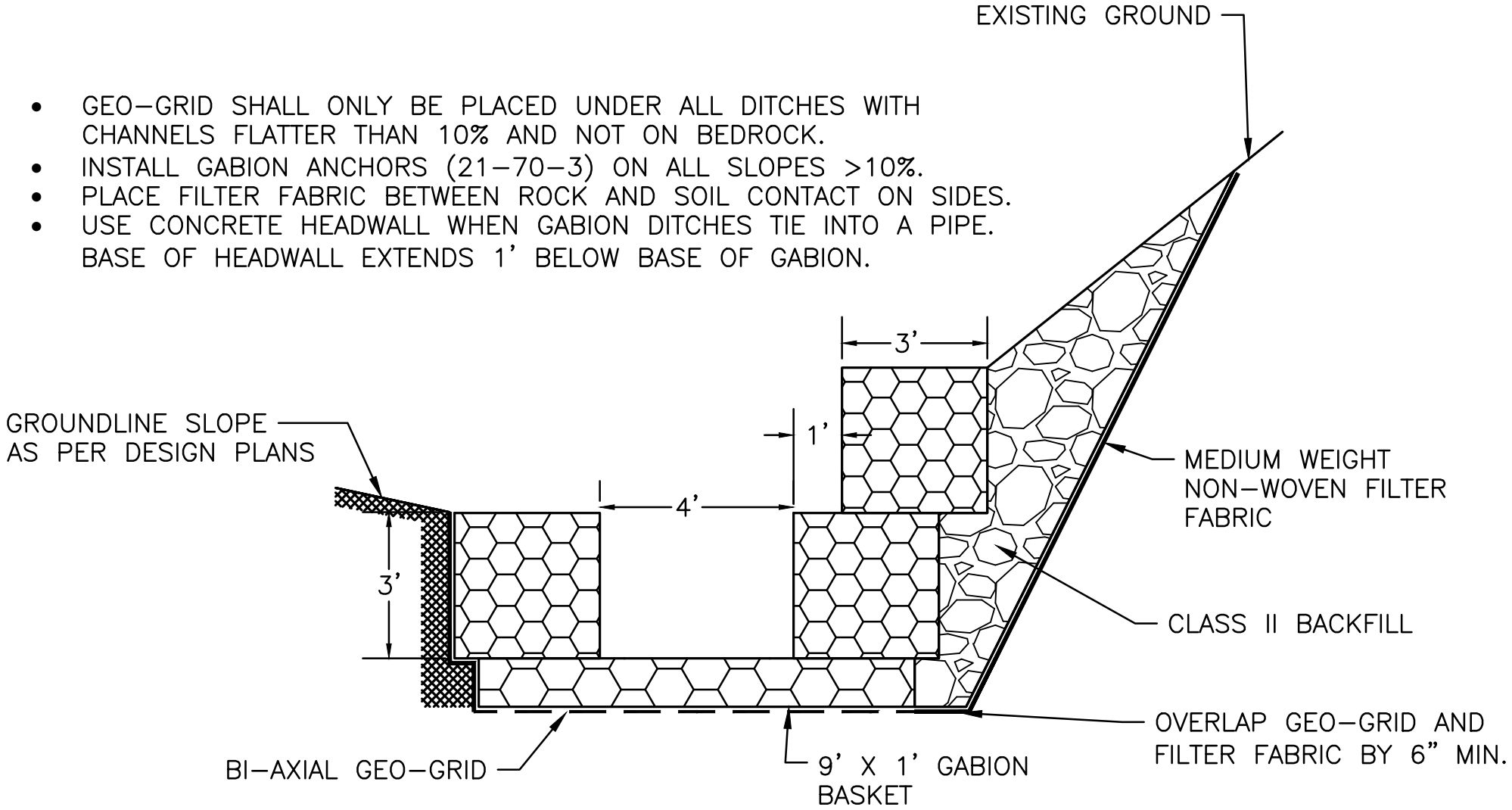

QUANTITIES

GABION	1.33 CY/LF
GEO–GRID	1.1 SY/LF
CLASS II BACKFILL	1.11 TON/LF
ECB	1.00 SY/LF
FILTER FABRIC	VARIES

USE WITH AML 21–70–3 & 70–30–1

GABION DITCH- RECTANGULAR 4' FLAT BOTTOM UNEVEN SIDE HEIGHTS (AML 21-40-4)

KY DAML 7–2017

- GEO–GRID SHALL ONLY BE PLACED UNDER ALL DITCHES WITH CHANNELS FLATTER THAN 10% AND NOT ON BEDROCK.
- INSTALL GABION ANCHORS (21–70–3) ON ALL SLOPES >10%.
- PLACE FILTER FABRIC BETWEEN ROCK AND SOIL CONTACT ON SIDES.
- USE CONCRETE HEADWALL WHEN GABION DITCHES TIE INTO A PIPE. BASE OF HEADWALL EXTENDS 1' BELOW BASE OF GABION.

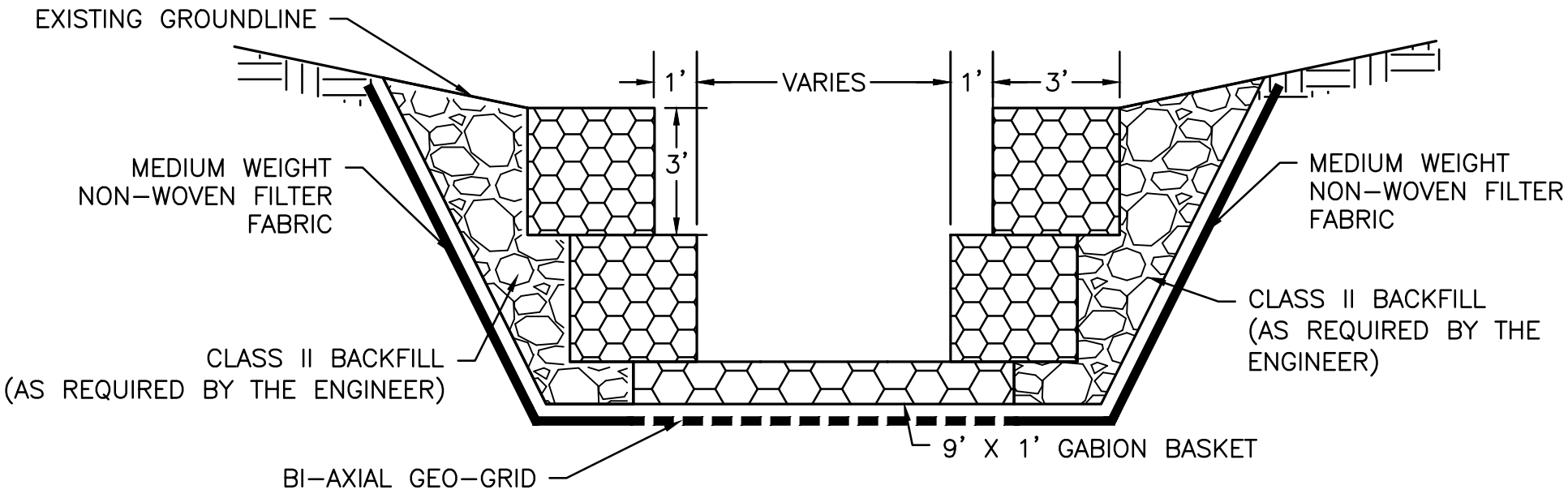

6' FB DITCH		
GABION	1.70	CY/LF
GEO–GRID	2.70	SY/LF
CLASS II BACKFILL	1.80	TON/LF
ECB	1.00	SY/LF
FILTER FABRIC	2.5	SY/LF

8' FB DITCH		
GABION	1.80	CY/LF
GEO–GRID	3.50	SY/LF
CLASS II BACKFILL	1.80	TON/LF
ECB	1.00	SY/LF
FILTER FABRIC	2.5	SY/LF

USE WITH AML 21–70–3 & 70–30–1

GABION DITCH- RECTANGULAR 6' & 8' FLAT BOTTOM (AML 21-40-5)

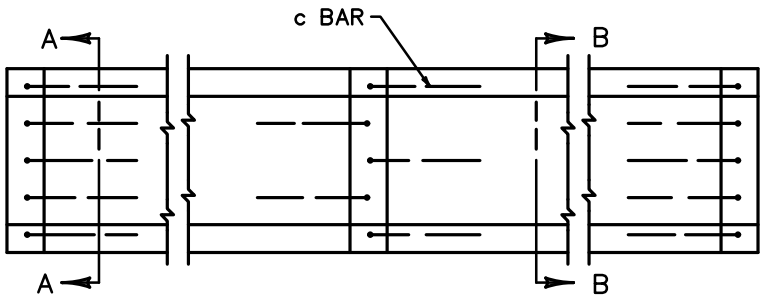

PLAN VIEW

NOTES:

1. ESTIMATE 0.032 CYD CLASS "A" CONCRETE PER LF OF DITCH AND 0.060 CYD CLASS "A" CONCRETE PER ANCHOR BASED ON MINIMUM DIMENSIONS SHOWN. ALL CONCRETE HAS FIBER REINFORCEMENT.
2. IF THE CONTRACTOR ELECTS TO USE A CONSTRUCTION JOINT IN THE POURING OF THE PAVED DITCH, IT SHALL BE CONSTRUCTED AS SHOWN.
3. ANY LENGTH OF LONGITUDINAL REINFORCEMENT STEEL WILL BE PERMITTED PROVIDED A 1'–0" LAP IS USED IN THE SPLICE. ADEQUATE TIES AT THE SPLICE SHALL BE REQUIRED.

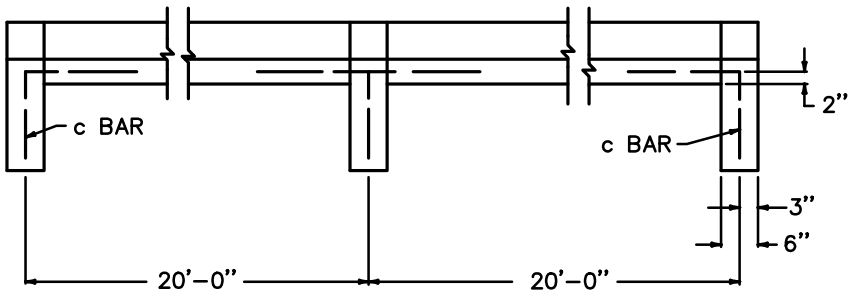

ELEVATION VIEW

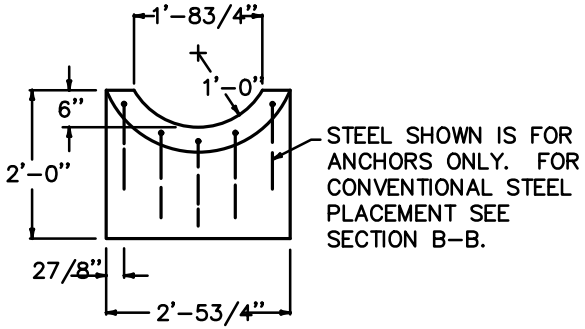

SECTION A–A

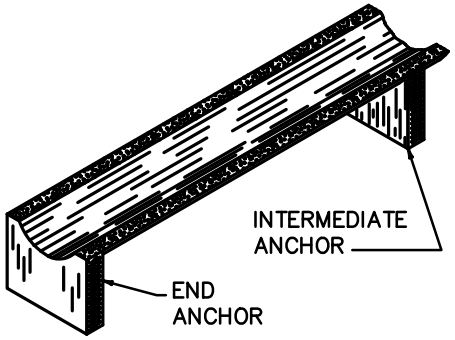

ISOMETRIC VIEW

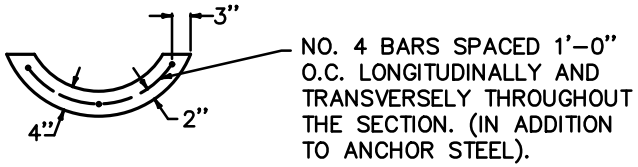

SECTION B–B

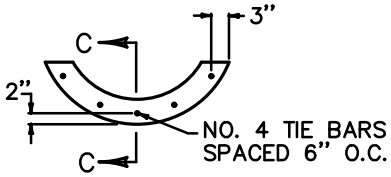

TIE BAR SECTIONAL VIEW

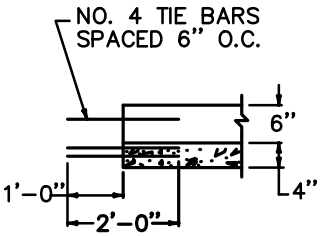

SECTION C–C

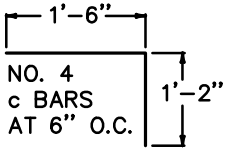

c BAR DETAIL

APPROXIMATE STEEL QUANTITIES FOR MINIMUM SECTION SHOWN			
END ANCHORS (EACH)	8.90 LBS.	CONSTRUCTION JOINTS (EACH)	6.68 LBS.
INTERMEDIATE ANCHORS (EACH)	8.90 LBS.	BARS PER SQ. YD. OF DITCH	12.47 LBS.

CONCRETE DITCH- SWALE (AML 21-50-1)

KYDAML 10–2013

NOTES:

1. ESTIMATE 0.080 CYD CLASS A CONCRETE PER LINEAR FOOT OF DITCH AND 0.398 CYD CONCRETE PER ANCHOR BASED ON MINIMUM DIMENSIONS SHOWN ON THIS DRAWING.
2. THE SECTION SHOWN WITHIN THE MINIMUM DIMENSION IS ESTIMATED AT 0.72 SQ. YD. PER LF.
3. ANY LENGTH OF LONGITUDINAL REINFORCING STEEL WILL BE PERMITTED PROVIDED SUFFICIENT SPLICE IS USED (SEE 'STEEL' SECTION OF AML TECHNICAL SPECIFICATIONS).
4. USE CLASS A (3,500 PSI) CONCRETE WITH FIBER REINFORCEMENT

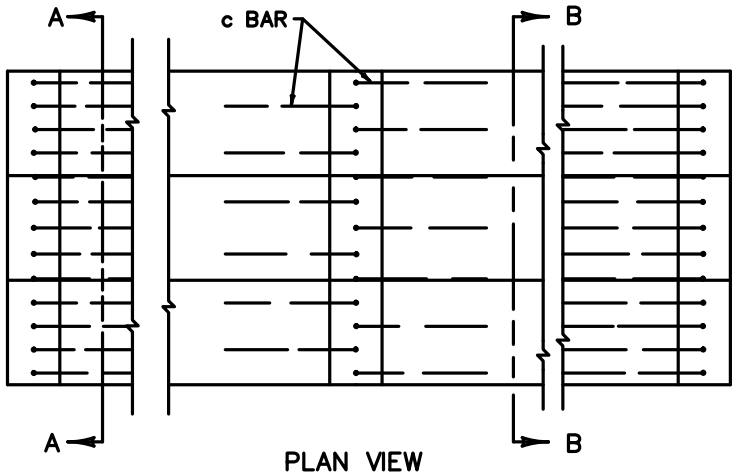

PLAN VIEW

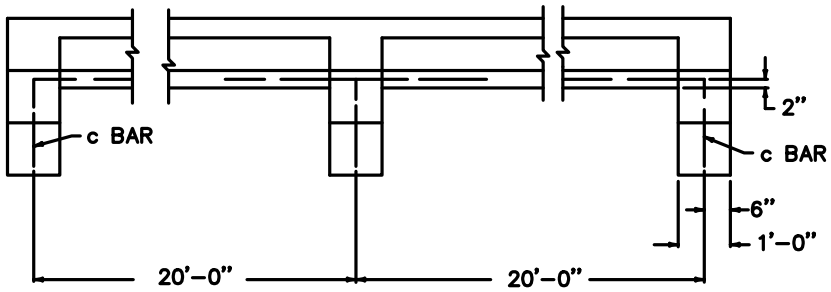

ELEVATION VIEW

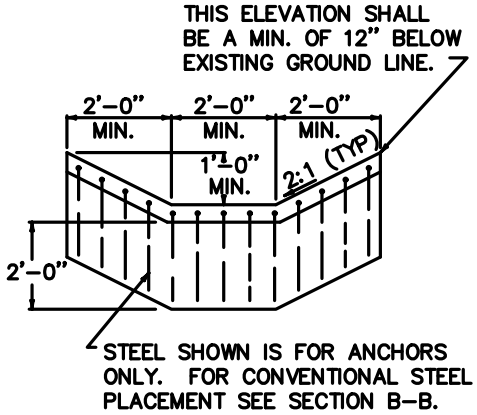

SECTION A-A

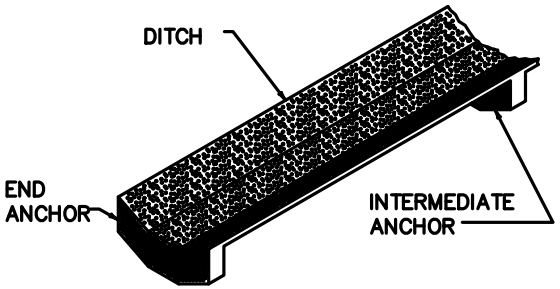

ISOMETRIC VIEW

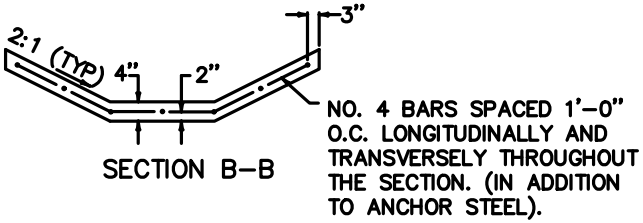

SECTION B-B

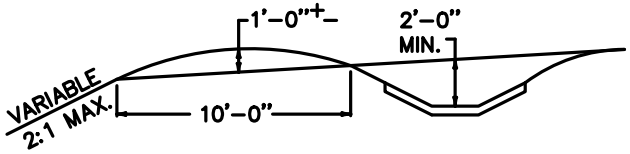

TYPICAL DITCH

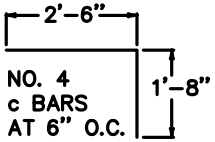

c BAR DETAIL

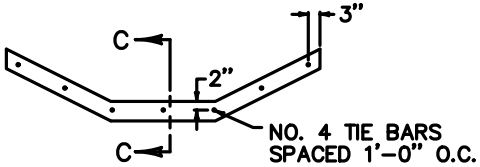

TIE BAR SECTIONAL VIEW

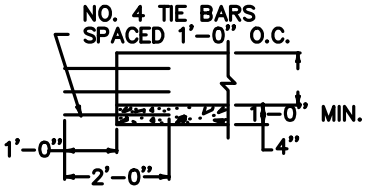

SECTION C-C

APPROX. STEEL QUANTITIES FOR MINIMUM SECTION SHOWN	
END ANCHORS (EACH)	36.19 LBS.
INTERMEDIATE ANCHORS (EACH)	36.19 LBS.
CONSTRUCTION JOINTS (EACH)	9.352 LBS.
BARS PER SQ. YD. OF DITCH	12.047 LBS.

CONCRETE DITCH- TRAPEZOIDAL (AML 21-50-2)

KY DAML 3-2014

CONSTRUCTION JOINTS SHALL BE PLACED A MINIMUM OF 10' & A MAXIMUM OF 20'. SEE "STEEL" SECTION OF AML TECHNICAL SPECIFICATION FOR BAR SPLICES & EMBEDMENT INFORMATION. INSERT WEEP HOLES AT CONSTRUCTION JOINTS.

ALL STEEL REINFORCEMENT SHALL BE 60 KSI. ALL CONCRETE IS 4,000 PSI WITH FIBER REINFORCEMENT. SECURITY ANCHORS ARE INCIDENTAL. DON'T WELD GRATES CLOSED. ALL REBAR SHALL HAVE 2" MIN CLEARANCE.

INSTALL SIDEWALLS COMPLETELY BELOW GROUNDLINE. UNITS MAY BE PRE-CAST WITH ENGINEER'S PRIOR APPROVAL.

VEHICLE GRATE IS EQUIVALENT OF JR HOE "STANDARD" OR NEENAH R-499- TYPE A. ALL GRATES USE EMBEDDED FRAME RAIL TO SECURE GRATE TO THE TENCH.

NON-VEHICULAR GRATE IS 1" X 3/16" BEARING BAR SIZE PLAIN BLACK PAINTED, WELDED STEEL BAR GRATING.

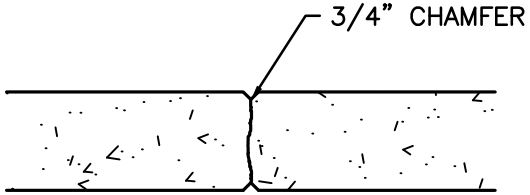

CONSTRUCTION JOINT

SEE AML 30-60-3 FOR ADDITIONAL DETAILS

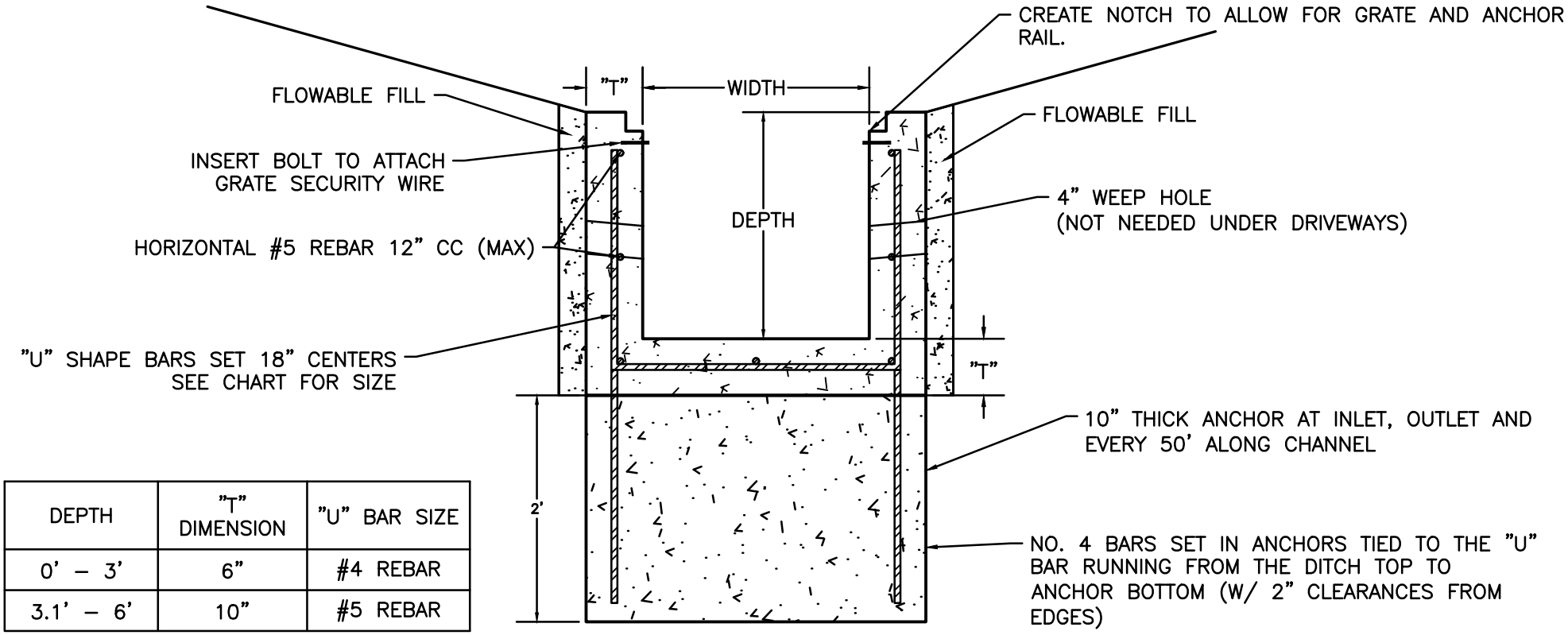

DEPTH	"T" DIMENSION	"U" BAR SIZE
0' – 3'	6"	#4 REBAR
3.1' – 6'	10"	#5 REBAR

USE WITH AML 24-50-1

CONCRETE DITCH- RECTANGULAR w/ GRATE (AML 21-50-3)

KY DAML 7-2017

CONSTRUCTION JOINTS SHALL BE PLACED A MINIMUM OF 10' & A MAXIMUM OF 20'. SEE "STEEL" SECTION OF AML TECHNICAL SPECIFICATION FOR BAR SPLICES & EMBEDMENT INFORMATION. INSERT WEEP HOLES AT CONSTRUCTION JOINTS.

ALL STEEL REINFORCEMENT SHALL BE 60 KSI. ALL CONCRETE IS 4,000 PSI WITH FIBER REINFORCEMENT. SEE "STEEL" SECTION OF AML TECHNICAL SPECIFICATION FOR BAR SPLICES & EMBEDMENT INFORMATION. ALL REBAR SHALL HAVE 2" MIN CLEARANCE.

INSTALL SIDEWALLS COMPLETELY BELOW GROUNDLINE.

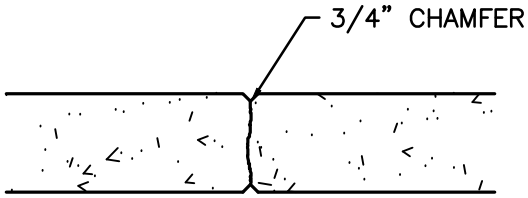

CONSTRUCTION JOINT

SEE AML 30-60-3 FOR ADDITIONAL DETAILS

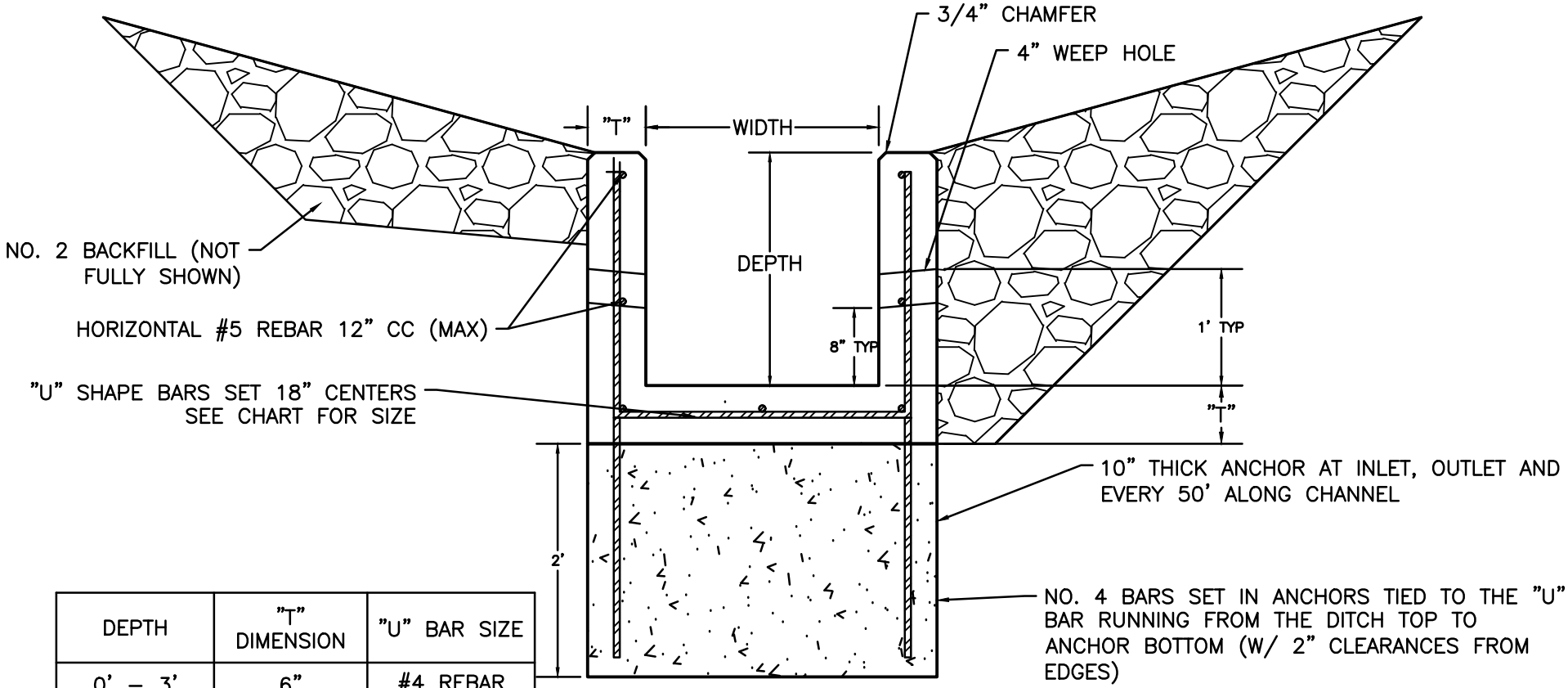

DEPTH	"T" DIMENSION	"U" BAR SIZE
0' – 3'	6"	#4 REBAR
3.1' – 6'	10"	#5 REBAR

CONCRETE DITCH- RECTANGULAR NO GRATE (AML 21-50-4)

KY DAML 7-2017

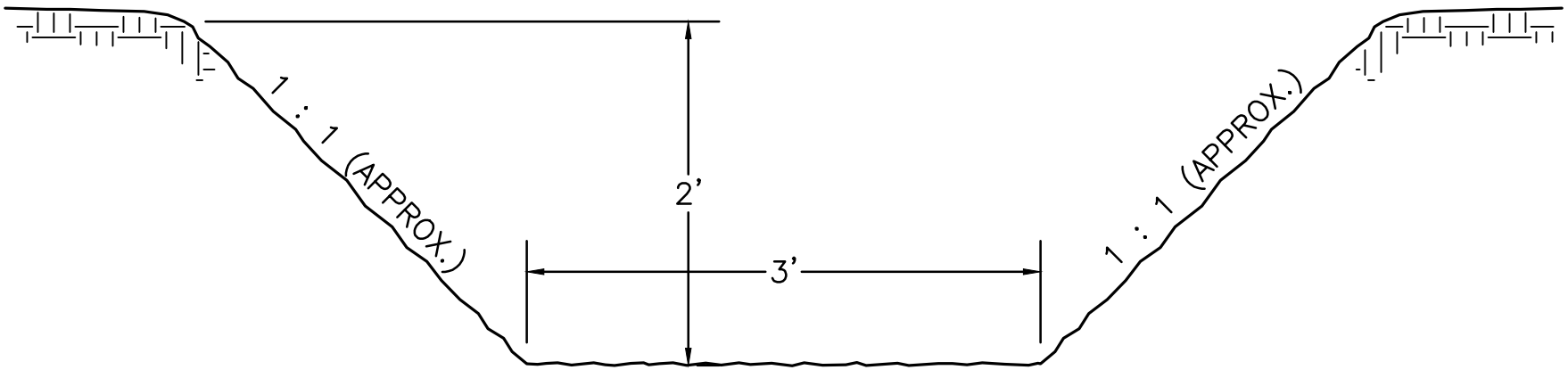

RECTANGULAR BOTTOM DITCH

USE OF HOE RAM MAY BE REQUIRED ON ROCK DITCHES.
ENGINEER MAY SPECIFY DIFFERENT DIMENSIONS DURING CONSTRUCTION

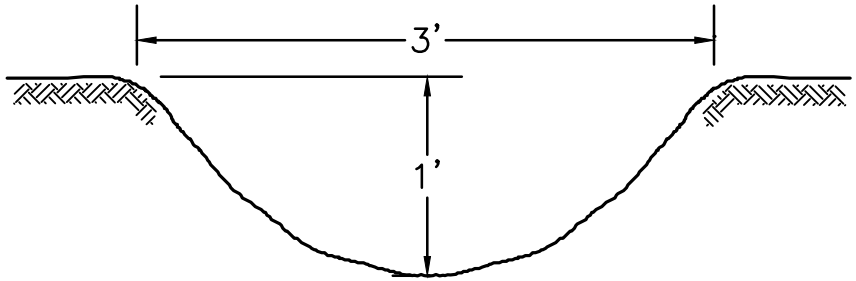

CIRCULAR BOTTOM DITCH

EXCAVATED ROCK DITCHES (AML 21-60-1)

NOTES:

1. SPACING OF ANCHORS SHALL BE AT ALL TRANSVERSE SEAMS AND 100' MAX INTERVALS.
2. TWO HAYBALES SHALL BE PLACED ON EACH SIDE AT ALL ANCHOR LOCATIONS
3. SOIL AMENDMENTS AND SEED SHALL BE APPLIED BEFORE INSTALLING EROSION CONTROL BLANKETS.

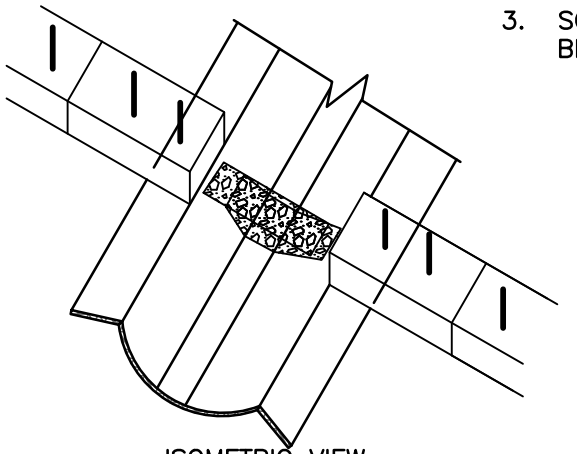

ISOMETRIC VIEW
NTS

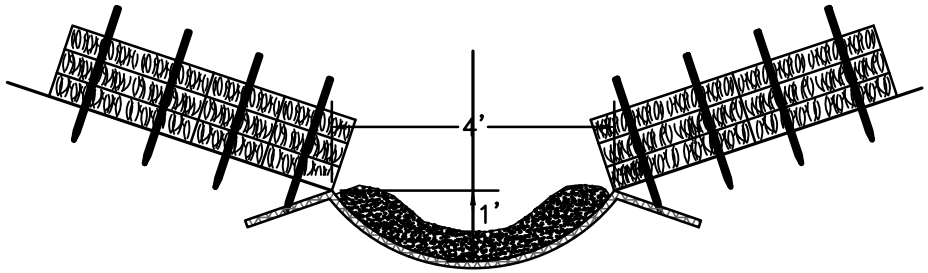

SECTION A–A
NTS

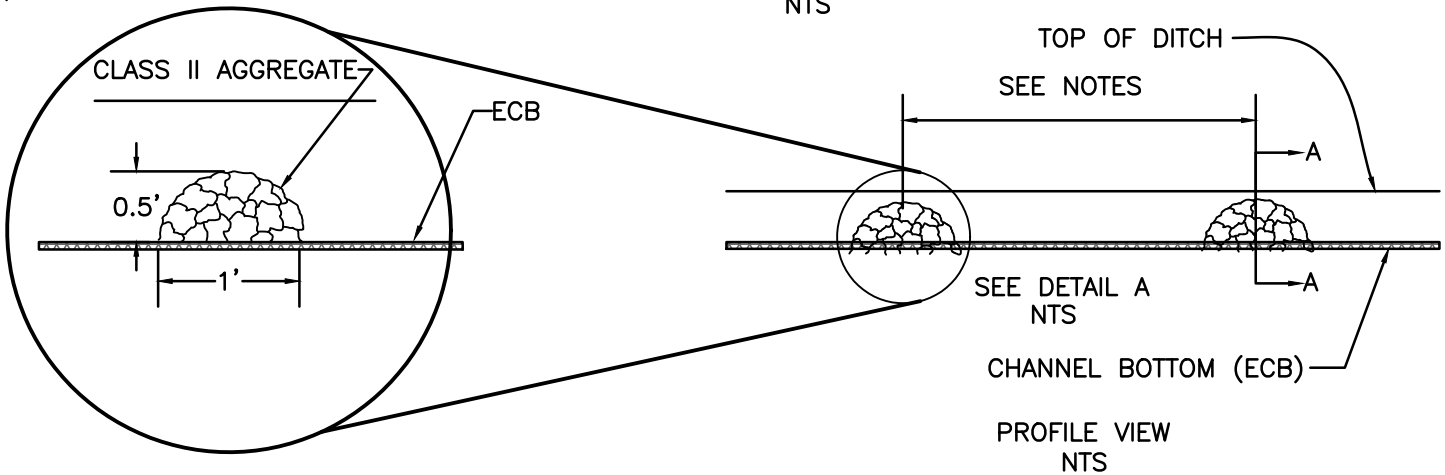

DETAIL A
NTS

PROFILE VIEW
NTS

USE WITH AML 21–10–3

ECB ANCHOR- SWALE DITCH SEAMS (AML 21-70-1)

KY DAML 9–2013

NOTES:

1. SPACING OF ANCHORS SHALL BE AT ALL TRANSVERSE SEAMS AND 100' MAX INTERVALS UNLESS STATED OTHERWISE ON THE DESIGN PLANS OR SPECIAL CONDITIONS.

2. SOIL AMENDMENTS AND SEED SHALL BE APPLIED BEFORE INSTALLING EROSION CONTROL BLANKETS.

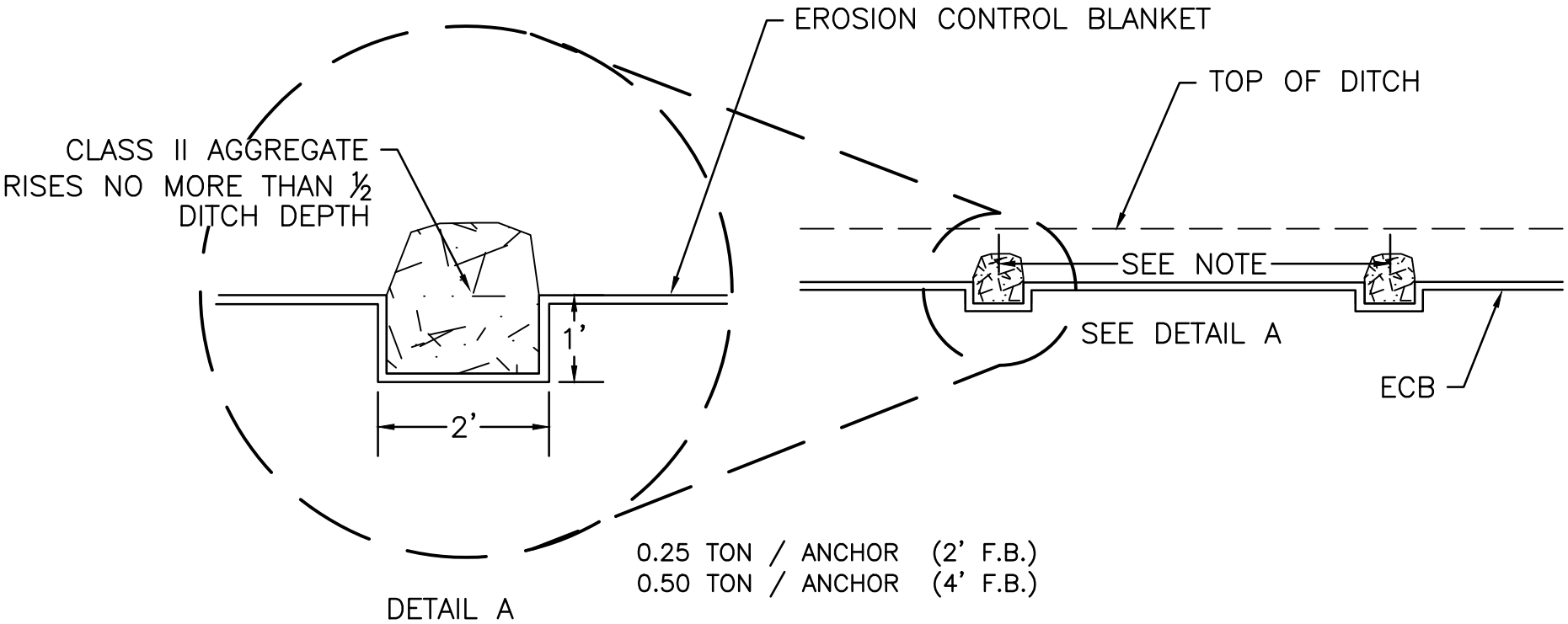

USE WITH AML 21–10–4

ECB ANCHOR- FB DITCH SEAMS (AML 21-70-2)

KY DAML 9–2013

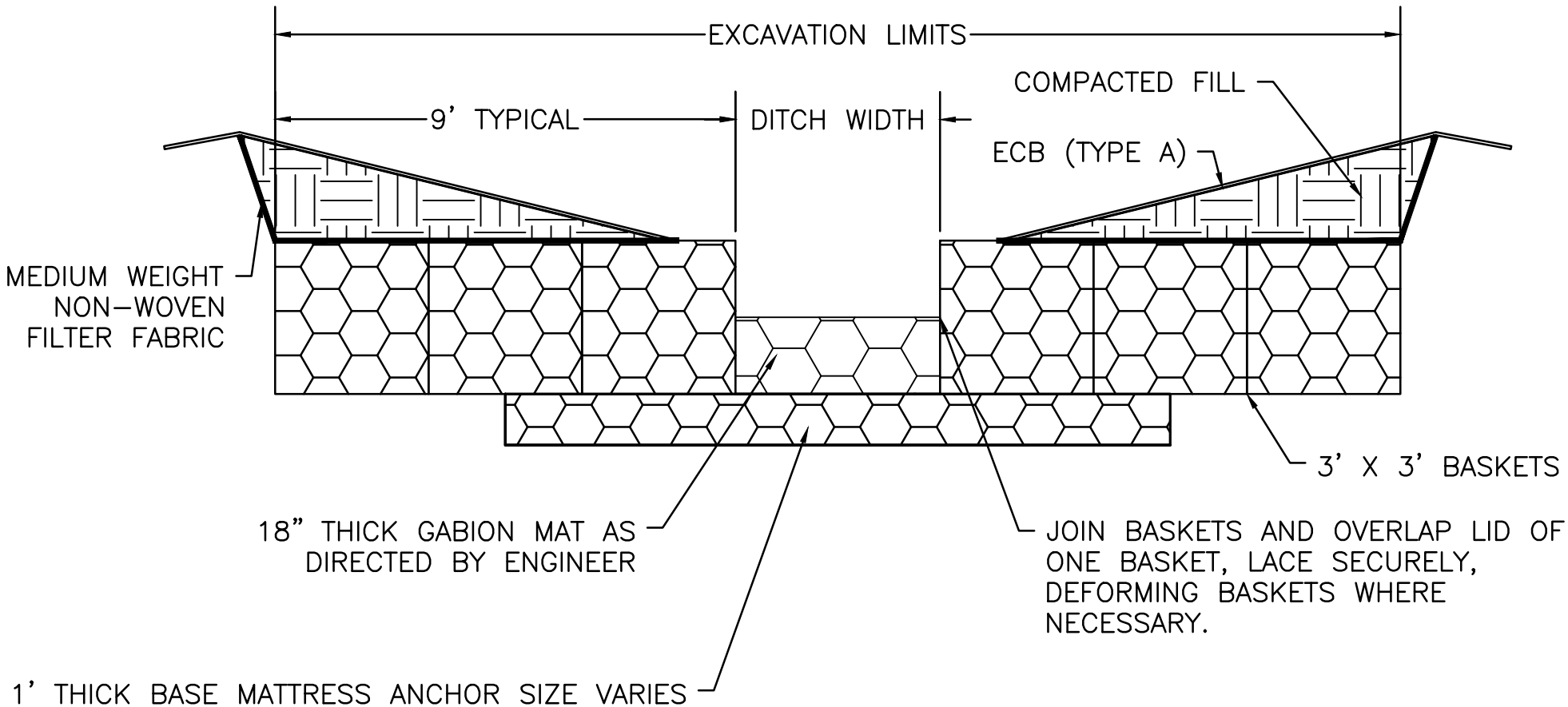

GABION ANCHORS MAY BE USED IN ALL TYPES OF GABION DITCHES AND IN ROCK DITCHES AS DIRECTED BY THE ENGINEER.

GABION DITCH ANCHORS- (AML 21-70-3)

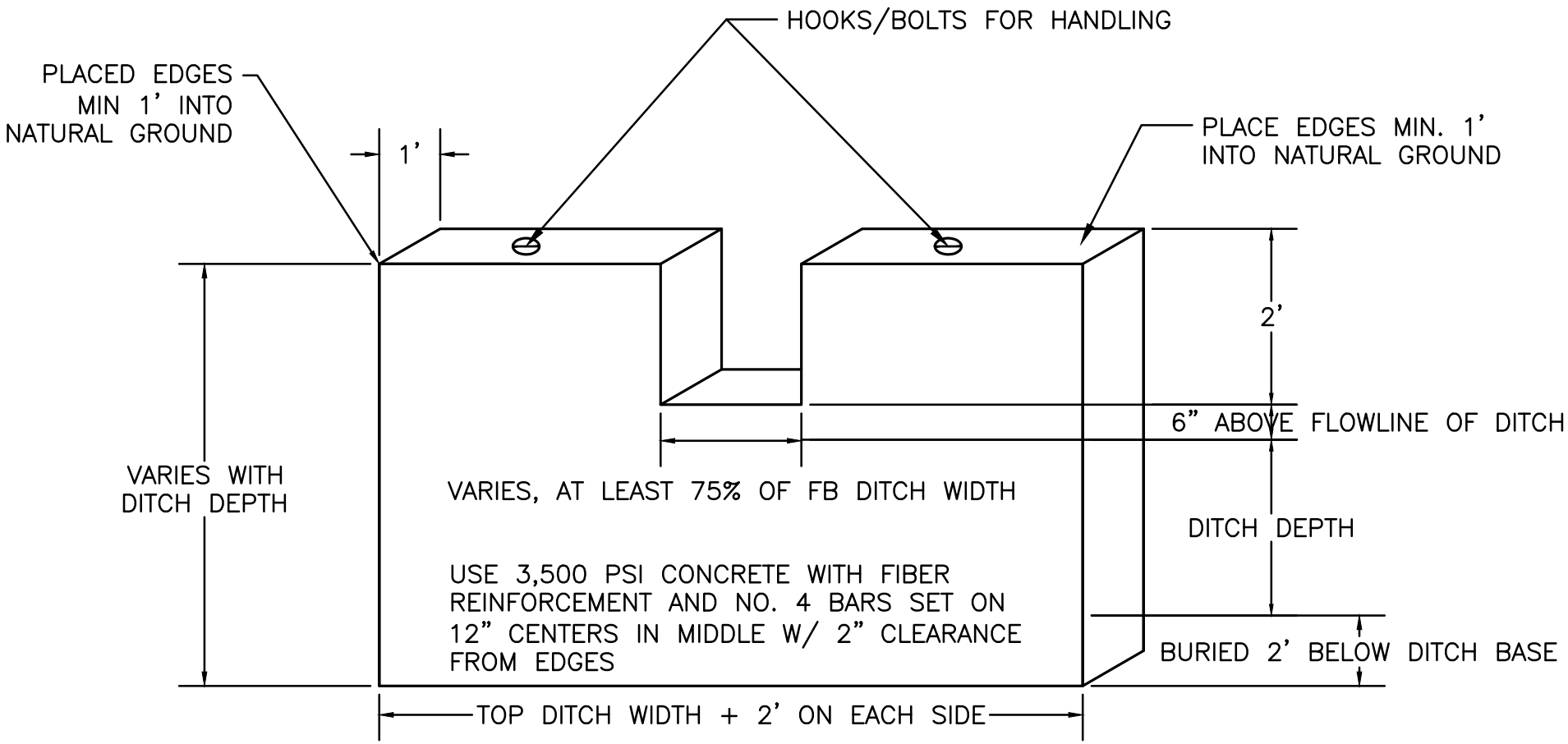

NOTE: WHEN USED IN GABION DITCHES PUT HOOKS/BOLTS ON DOWNSTREAM FACE IN ORDER TO ATTACH GABIONS (MINIMUM OF 4 HOOKS/BOLTS).

PLACE EDGES INTO NATURAL GROUND OR PAST EDGES OF GABION BASKETS. INSERT REBAR INTO SIDES AND CAST ADDITIONAL CONCRETE ON EDGES TO EXTEND IF NECESSARY TO FIT PRECAST PIECES INTO NATURAL GROUND.

CONCRETE WEIR/ANCHOR (AML 21-70-4)

FOLLOW CROSS–SECTIONS WHEN AVAILABLE

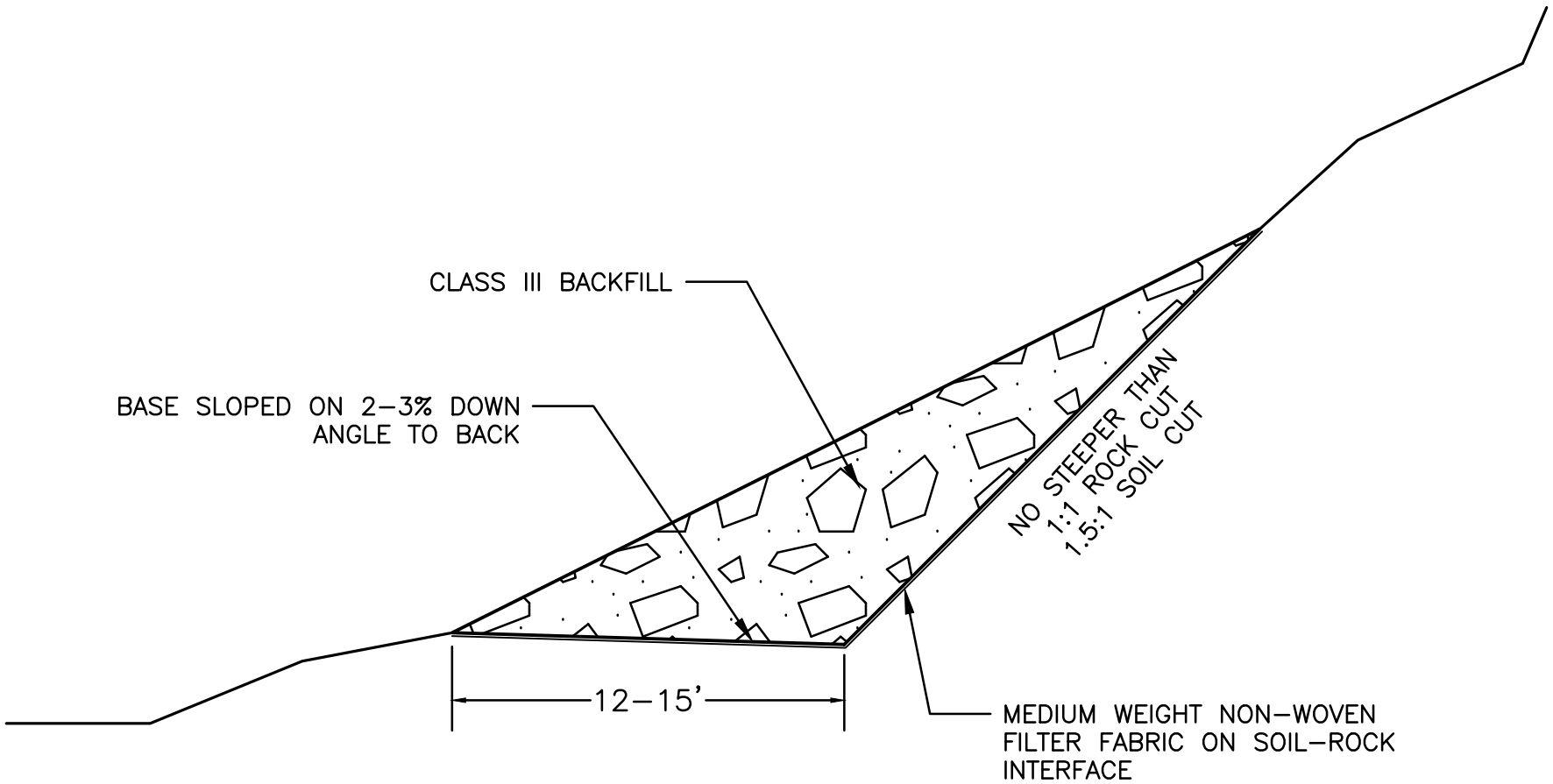

ROCK TOE BUTTRESS (AML 22-10-1)

KYDAML 7/2017

FOLLOW CROSS–SECTIONS WHEN AVAILABLE

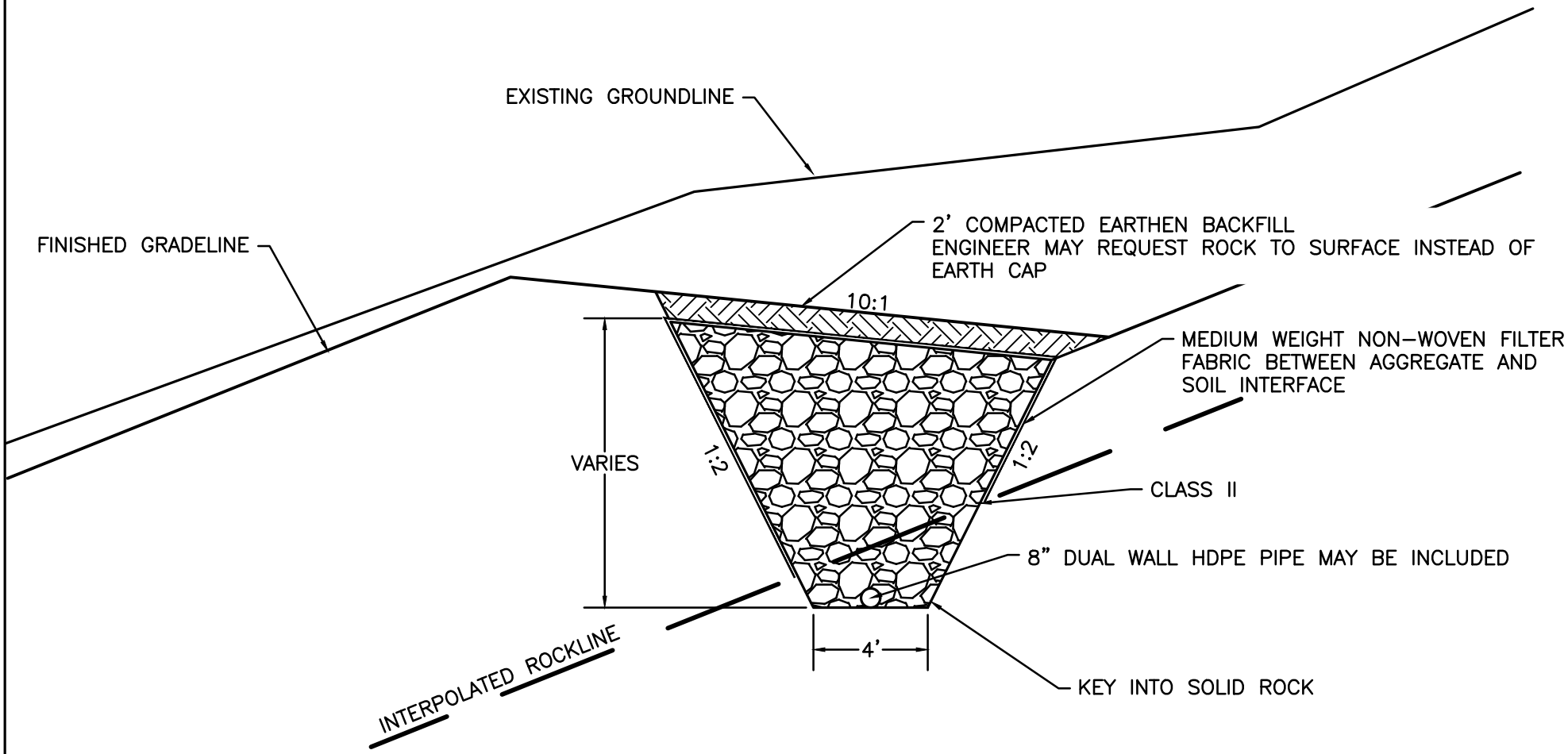

SHEAR KEY (AML 22-10-2)

KY DAML 7–2017

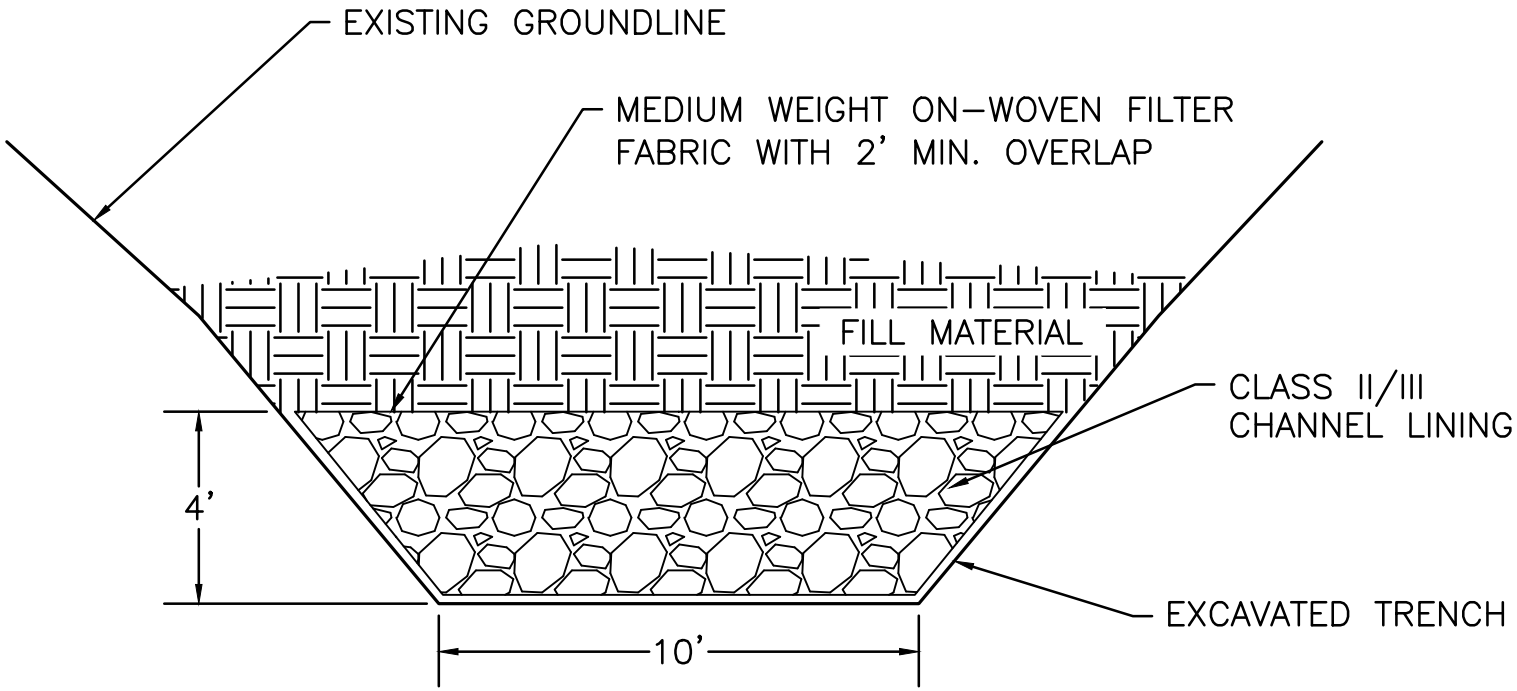

SIDE SLOPE	CLASS II/III	FILTER FABRIC
1:1	3.1 TON/LF	4.7 SY/LF
2:1	4.0 TON/LF	7.2 CY/LF

ROCK CORE DRAIN (AML 22-20-1)

KY DAML 7-2017

NOTES:

1. EXCAVATION SHALL BE CONSIDERED INCIDENTAL FOR SUBDRAINS INSTALLED TO 3 FT DEEP. FOR SUBDRAINS DEEPER THAN 3 FT, EXCAVATION SHALL BE INCLUDED FOR PAYMENT AS EARTHWORK.
2. USE SOCK PIPE FOR ALL DEPTHS.
3. WHEN SWITCHING FROM PERFORATED TO NON-PERFORATED PIPE USE A SUBDRAIN COLLAR (AML 21-30-2)
4. SET PIPE ON MINIMUM OF 1% GRADE. RAISE THE PIPE IF NECESSARY TO MAINTAIN GRADE. THE ROCK CORE OF THE SUBDRAIN IS STILL TIED INTO BEDROCK.
5. THE CONSTRUCTION DRAWINGS, NOTES, SPECIAL CONDITIONS MAY REQUIRE A LARGE DIAMETER PIPE THAN SHOWN, THE LARGER PIPE IS STILL INCIDENTAL TO THE SUBDRAIN.
6. BRING THE SUBDRAIN ROCK TO THE GROUND SURFACE. FOR COMBINATION DITCH-SUBDRAIN SEE AML 22-30-4 & 5.

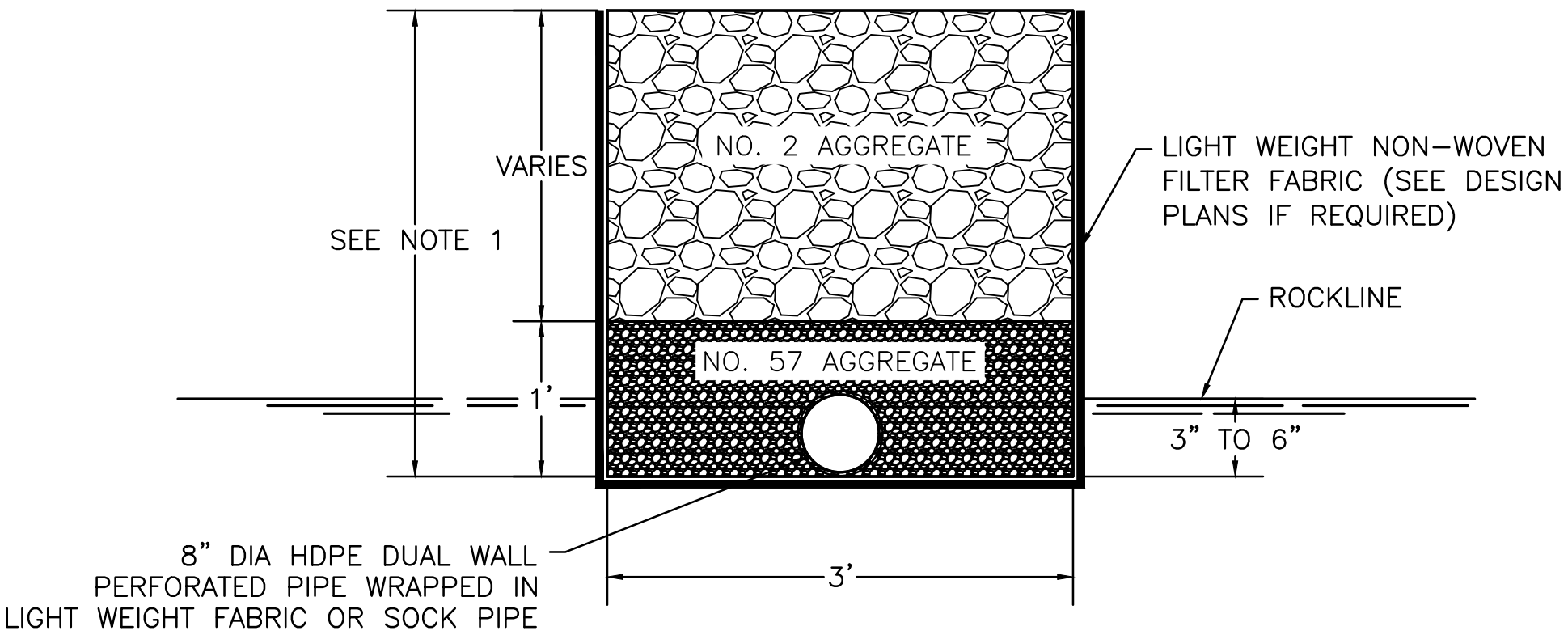

USE WITH AML 22-30-2

SUBDRAIN (AML 22-30-1)

KY DAML 7-2017

SUBDRAIN COLLARS JOIN PERFORATED AND NON–PERFORATED PIPE.

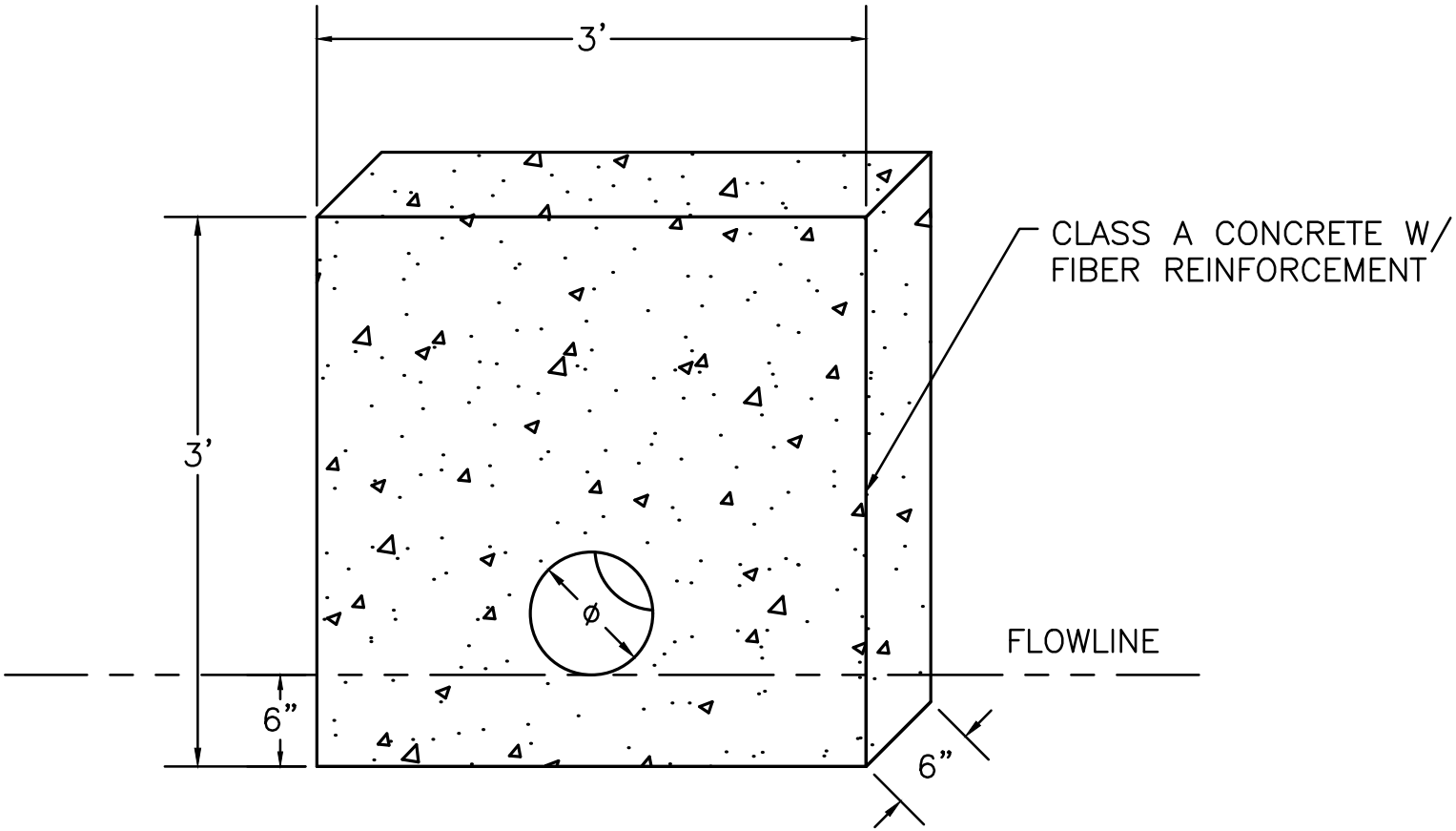

USE WITH AML 22–30–1

SUBDRAIN COLLAR (AML 22-30-2)

KY DAML 1–2013

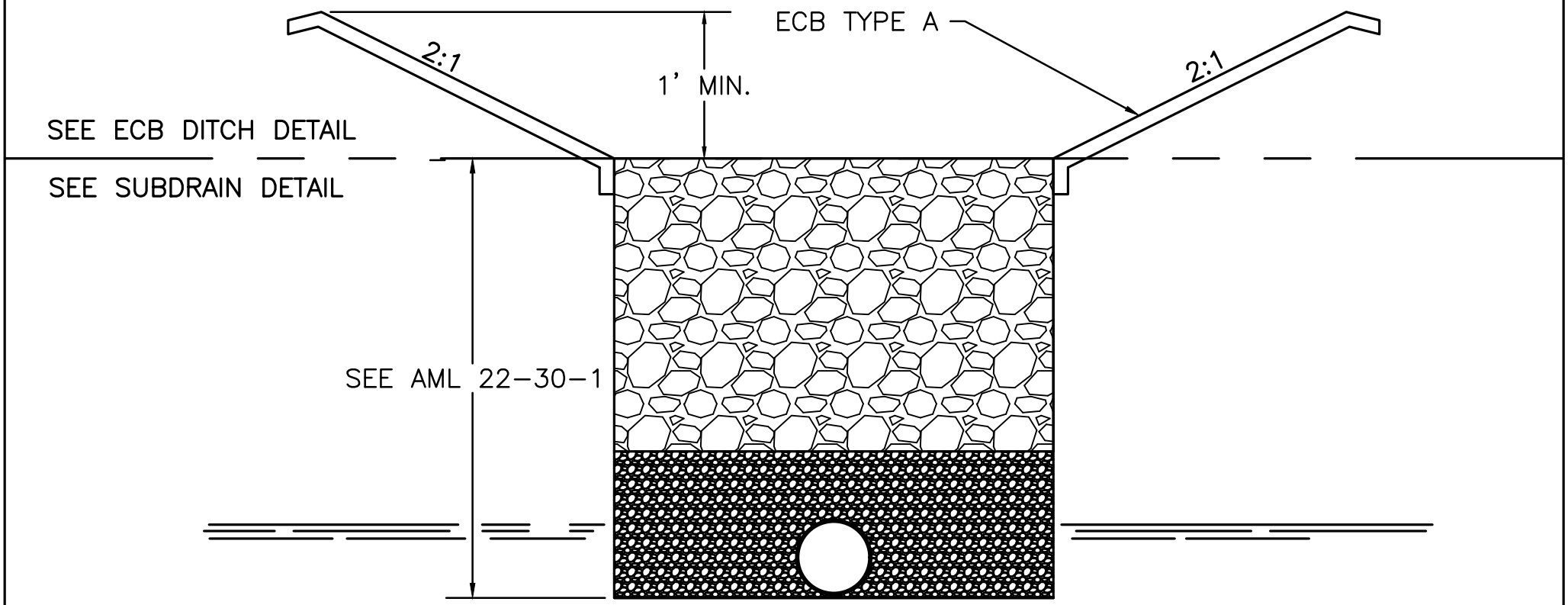

SEE THE DITCH AND SUBDRAIN DETAILS FOR SPECIFIC INFORMATION. SEPARATE BID ITEMS.

COMBINATION ECB DITCH-DRAIN (AML 22-30-3)

KY DAML 7-2017

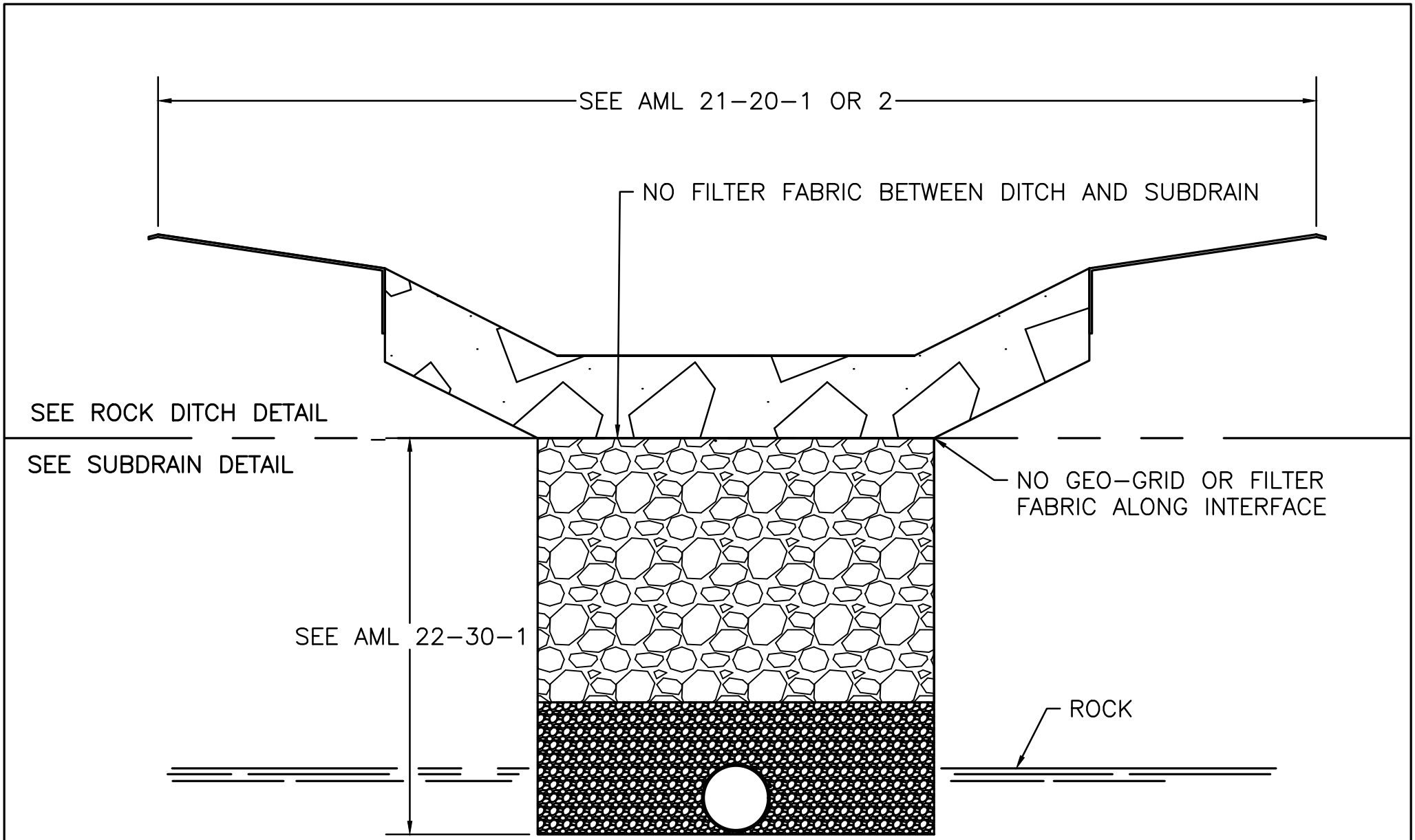

SEE THE DITCH OR SUBDRAIN DETAIL FOR SPECIFIC INFORMATION. SEPARATE BID ITEMS.

COMBINATION ROCK DITCH-DRAIN (AML 22-30-4)

KY DAML 7-2017

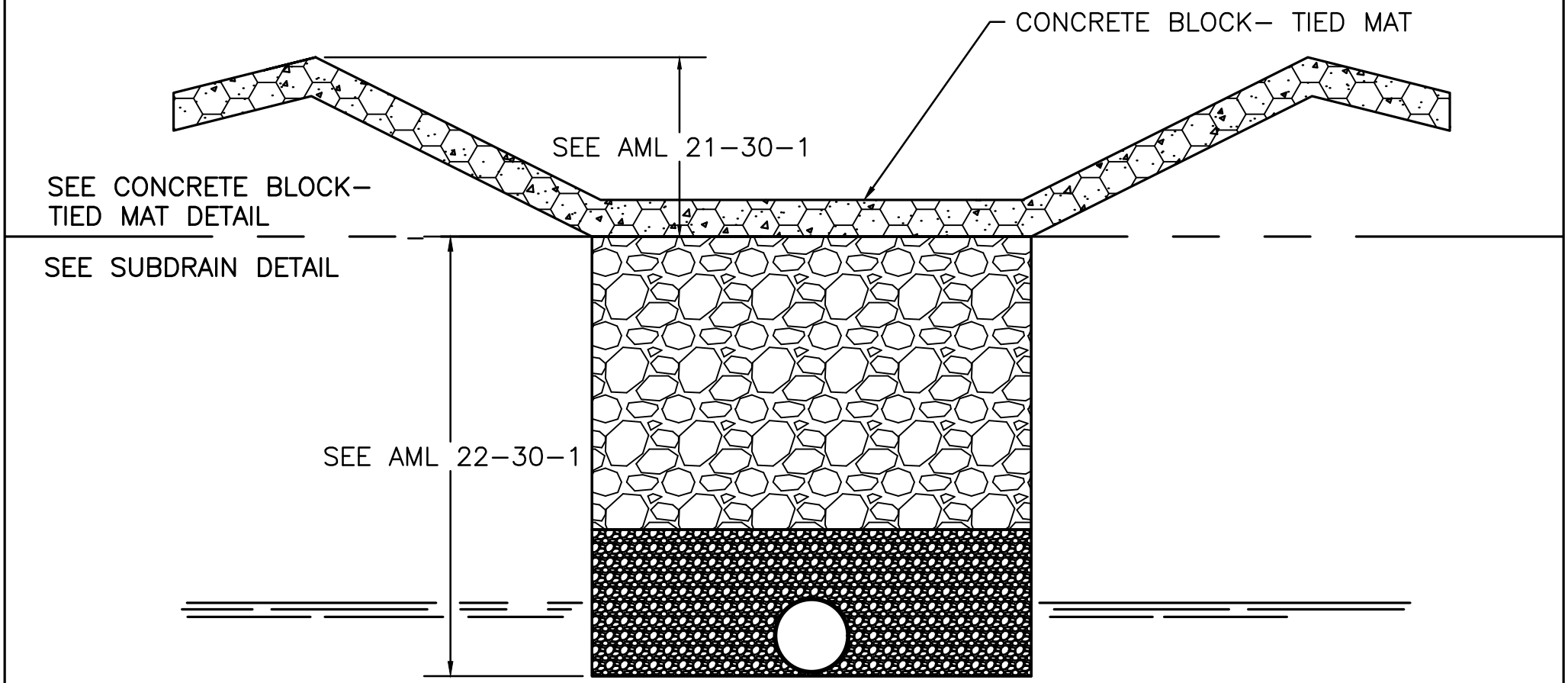

SEE THE DITCH AND SUBDRAIN DETAILS FOR SPECIFIC INFORMATION.

SEPARATE BID ITEMS.

COMBINATION CONCRETE BLOCK- TIED MAT & DRAIN (AML 22-30-5)

KY DAML 7–2017

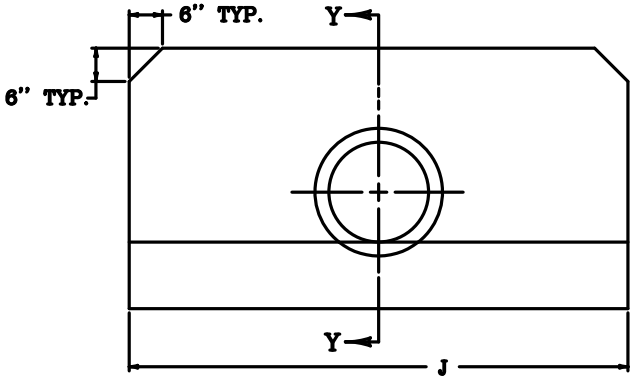

ELEVATION VIEW

NOTES

1. THE "H" DIMENSION AND/OR ANGLE OF INTERSECTION BETWEEN THE WALLS MAY BE VARIED ON CONSTRUCTION.
2. VOLUME BASED ON VALUES OF 18" ON EARTH AND 12" ON ROCK.
3. FINISH BY FLOATING
4. CIRCULAR PIPE INCLUDES SLIGHTLY ELLIPTICAL CONCRETE PIPE WITH CIRCULAR REINFORCEMENT.
5. ALL HEADWALLS USE 3,500 PSI CONCRETE WITH FIBER REINFORCEMENT.
6. HEADWALLS FOR 48" DIA. AND LARGER PIPES INCLUDE NO. 4 REBAR SET ON 12" CENTERS VERTICALLY AND HORIZONTALLY WITH MIN. 2" CLEARANCE FROM EDGES.
7. USE 9" FOR PIPES <48" DIA., USE 12" FOR 48" AND LARGER DIA. PIPES

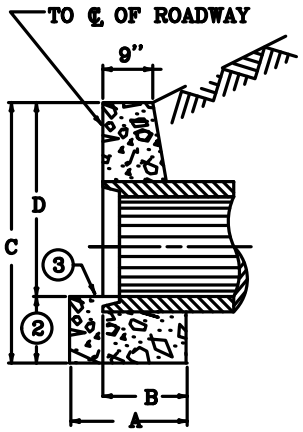

SECTION Y–Y

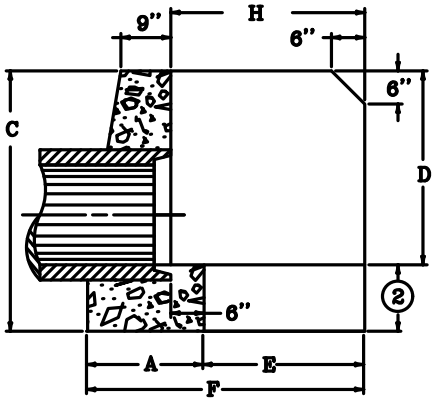

SECTION X–X

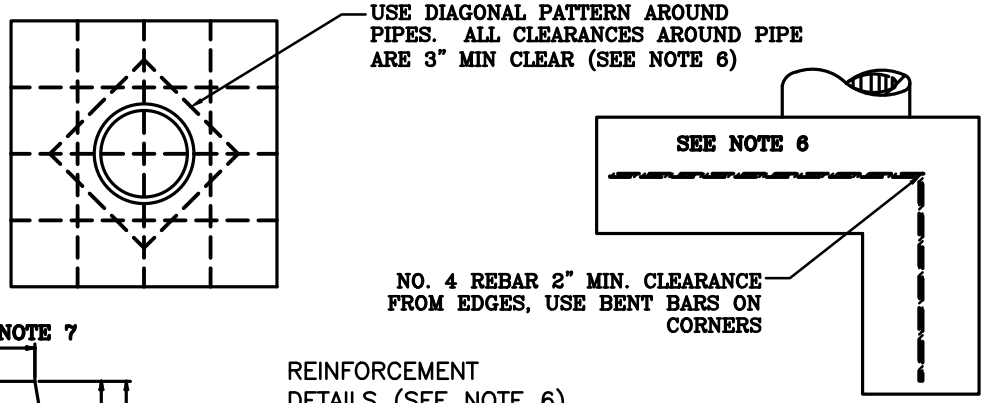

REINFORCEMENT
DETAILS (SEE NOTE 6)

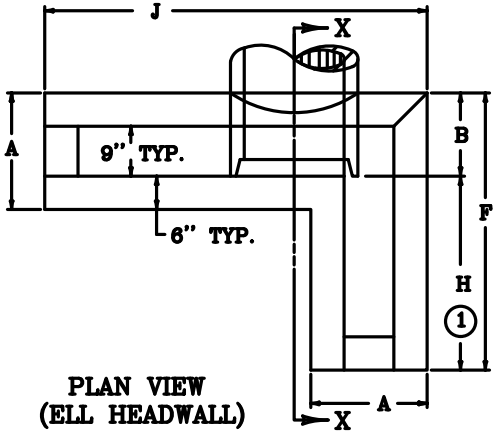

PLAN VIEW
(ELL HEADWALL)

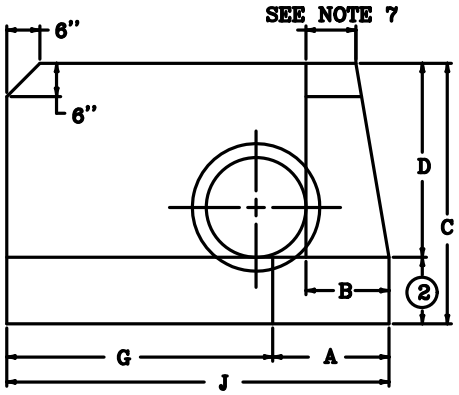

ELEVATION VIEW (ELL HEADWALL)

USE WITH AML 23–10–3, 23–10–11

CONCRETE HEADWALLS- CIRCULAR STANDARD & "ELL" (AML 23-10-1)

KY DAML 12–2014

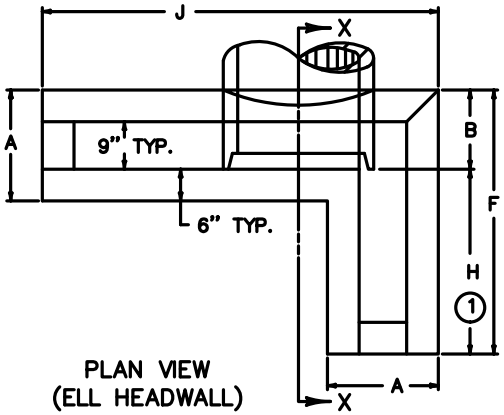

PLAN VIEW
(ELL HEADWALL)

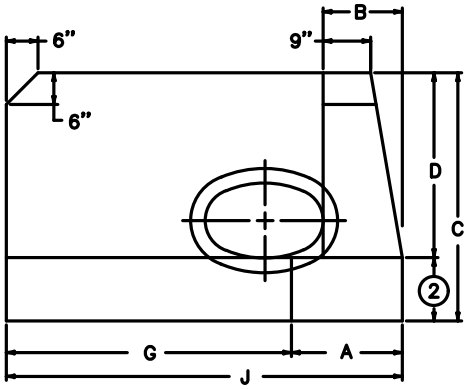

ELEVATION VIEW (ELL HEADWALL)

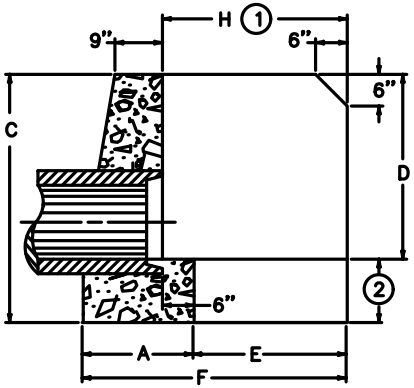

SECTION X–X

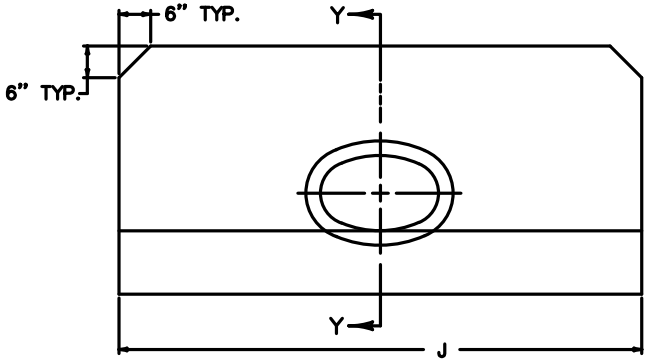

ELEVATION VIEW

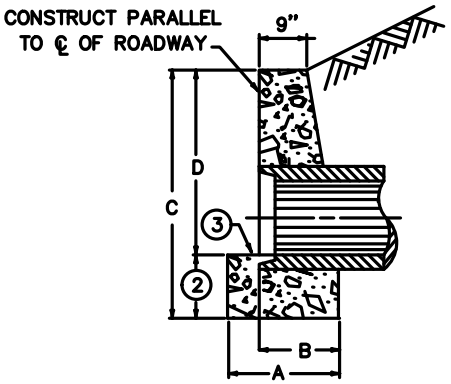

SECTION Y–Y

NOTES

1. THE DIMENSION AND/OR ANGEL OF INTERSECTION BETWEEN THE WALLS MAY BE VARIED ON CONSTRUCTION.
2. VOLUME BASED ON VALUES OF 18" ON EARTH, 12" ON ROCK.
3. FINISH BY FLOATING CONCRETE
4. ALL CONCRETE IS 3,500 PSI W/ FIBER REINFORCEMENT.

USE WITH AML 23–10–3, 23–10–11

CONCRETE HEADWALLS- ELLIPTICAL STANDARD & "ELL" (AML 23-10-2)

DIMENSIONS AND QUANTITIES FOR CIRCULAR PIPES												
HEADWALL TYPE	PIPE DIA.	A	B	C	D	E	F	G	H	J	CUBIC YARDS CONCRETE PER HEADWALL	
											EARTH	ROCK
STANDARD	12"	1'-8"	1'-2"	4'-0"	2'-6"	---	---	---	---	6'-0"	1.05	0.87
	15"	1'-8 1/2"	1'-2 1/2"	4'-3"	2'-9"	---	---	---	---	6'-9"	1.25	1.03
	18"	1'-9"	1'-3"	4'-6"	3'-0"	---	---	---	---	7'-6"	1.48	1.23
	24"	1'-10"	1'-4"	5'-0"	3'-6"	---	---	---	---	9'-0"	1.99	1.69
	27"	1'-10 1/2"	1'-4 1/2"	5'-3"	3'-9"	---	---	---	---	9'-9"	2.27	1.96
	36"	2'-0"	1'-6"	6'-0"	4'-6"	---	---	---	---	12'-0"	3.00	2.54
	48"	2'-2"	1'-8"	7'-0"	5'-6"	---	---	---	---	15'-0"	4.00	3.39
	60"	2'-4"	1'-10"	8'-0"	6'-6"	---	---	---	---	17'-0"	5.00	4.24
	72"	2'-6"	2'-0"	9'-0"	7'-6"	---	---	---	---	20'-0"	6.00	5.08
ELL	12"	1'-8"	1'-2"	4'-0"	2'-6"	2'-0"	3'-8"	3'-0"	2'-6"	4'-8"	1.19	0.99
	15"	1'-8 1/2"	1'-2 1/2"	4'-3"	2'-9"	2'-3"	3'-11 1/2"	3'-6"	2'-9"	5'-2 1/2"	1.42	1.19
	18"	1'-9"	1'-3"	4'-6"	3'-0"	2'-6"	4'-3"	4'-0"	3'-0"	5'-9"	1.67	1.41
	24"	1'-10"	1'-4"	5'-0"	3'-6"	3'-0"	4'-10"	5'-0"	3'-6"	6'-10"	2.22	1.89
	27"	1'-10 1/2"	1'-4 1/2"	5'-3"	3'-9"	3'-3"	5'-1 1/2"	5'-6"	3'-9"	7'-4 1/2"	2.52	2.15
	36"	2'-0"	1'-6"	6'-0"	4'-6"	4'-0"	6'-0"	7'-0"	4'-6"	8'-0"	3.36	2.84
	48"	2'-2"	1'-8"	7'-0"	5'-6"	5'-0"	7'-2"	9'-0"	5'-6"	10'-2"	4.48	3.79
	60"	2'-4"	1'-10"	8'-0"	6'-6"	6'-0"	8'-4"	11'-0"	6'-6"	12'-4"	5.60	4.74
	72"	2'-6"	2'-0"	9'-0"	7'-6"	7'-0"	9'-6"	13'-0"	7'-6"	14'-6"	6.72	5.69

DIMENSIONS AND QUANTITIES FOR NON-CIRCULAR PIPES														
TYPE	CIRCULAR EQUI. DIA.	RCP ELLIPTICAL	CMP ARCH	A	B	C	D	E	F	G	H	J	CUBIC YARDS CONCRETE PER HEADWALL	
		SIZE OF PIPE											EARTH	ROCK
STANDARD	15"	---	17" X 13"	1'-9"	1'-3"	4'-0"	2'-6"	---	---	---	---	7'-10"	1.43	1.18
	18"	23" X 14"	21" X 15"	1'-9"	1'-3"	4'-5"	2'-11"	---	---	---	---	8'-3"	1.64	1.33
	24"	30" X 19"	28' X 20"	1'-9"	1'-3"	4'-10"	3'-4"	---	---	---	---	9'-6"	2.1	1.79
	27"	34" X 22"	---	1'-10	1'-4"	5'-2"	3'-8"	---	---	---	---	10'-6"	2.53	2.18
ELL	15"	---	17" X 13"	1'-9"	1'-3"	4'-0"	2'-6"	1'-10"	3'-7"	4'-0"	2'-4"	5'-9"	1.41	1.16
	18"	23" X 14"	21" X 15"	1'-9"	1'-3"	4'-5"	2'-11"	2'-3"	4'-2"	4'-6"	2'-11"	6'-3"	1.86	1.76
	24"	30" X 19"	28" X 20"	1'-9"	1'-3"	4'-10"	3'-4"	2'-10"	4'-7"	5'-8"	3'-4"	7'-5"	2.48	2.3
	27"	34" X 22"	---	1'-10	1'-4"	5'-2"	3'-8"	3'-2"	5'-0"	6'-5"	3'-8"	8'-3"	2.74	2.67

USE WITH AML 23–10–1 & 2

CONCRETE HEADWALLS- STANDARD & "ELL" DIMENSIONS & QUANTITIES (AML 23-10-3)

NUMBER OF PIPES DIFFER FROM WHAT IS SHOWN.

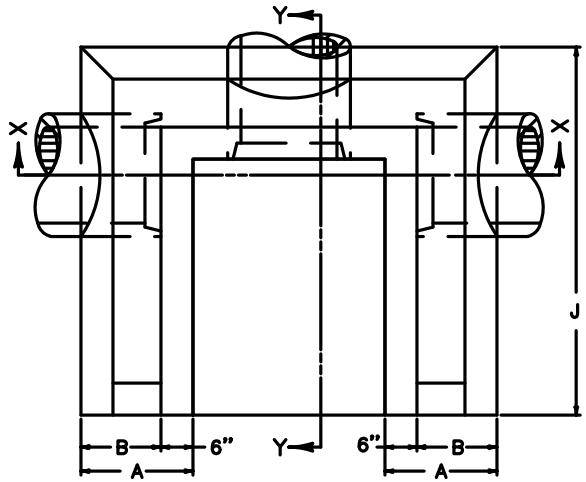

PLAN VIEW

DIMENSIONS AND QUANTITIES

PIPE DIAMETER	HEADWALL DIMENSIONS									CU. YD. CONC. FOR 1 HEADWALL
	A	B	C	D	E	F	G	H	J	
12"	1'-8"	1'-2"	4'-0"	1'-6"	2'-6"	2'-6"	5'-10"	3'-6"	4'-8"	2.07
15"	1'-8"	1'-2"	4'-3"	1'-6"	2'-9"	2'-9"	6'-2"	3'-9"	5'-2"	2.42
18"	1'-9"	1'-3"	4'-6"	1'-6"	3'-0"	3'-0"	6'-6"	4'-0"	5'-9"	2.86
24"	1'-10"	1'-4"	5'-0"	1'-6"	3'-6"	3'-6"	7'-2"	4'-6"	6'-10"	3.75
30"	1'-11"	1'-5"	5'-6"	1'-6"	4'-0"	3'-9"	7'-7"	4'-9"	7'-11"	4.78
36"	2'-0"	1'-6"	6'-6"	2'-0"	4'-6"	4'-0"	8'-0"	5'-0"	9'-0"	6.72

NOTES

1. VOLUME DISPLACED BY BARREL OF PIPE NEED TO BE COMPUTED USING INSIDE DIAMETER OF PIPE.
2. ALL CONCRETE IS 3,500 PSI W/ FIBER REINFORCEMENT.

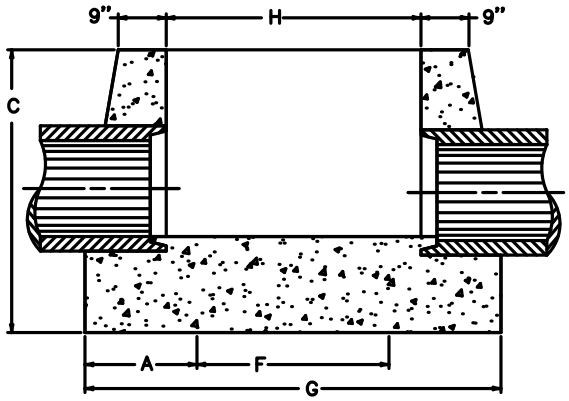

SECTION X-X

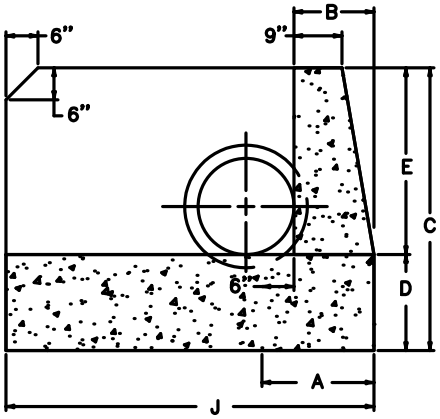

SECTION Y-Y

USE WITH AML 23-10-11

CONCRETE HEADWALLS- U-TYPE (AML 23-10-4)

KY DAML 1-2013

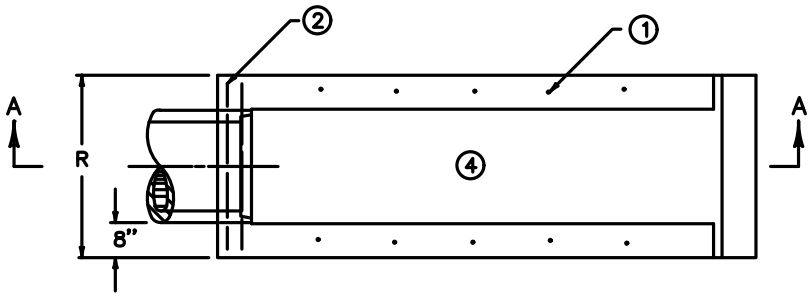

PLAN VIEW

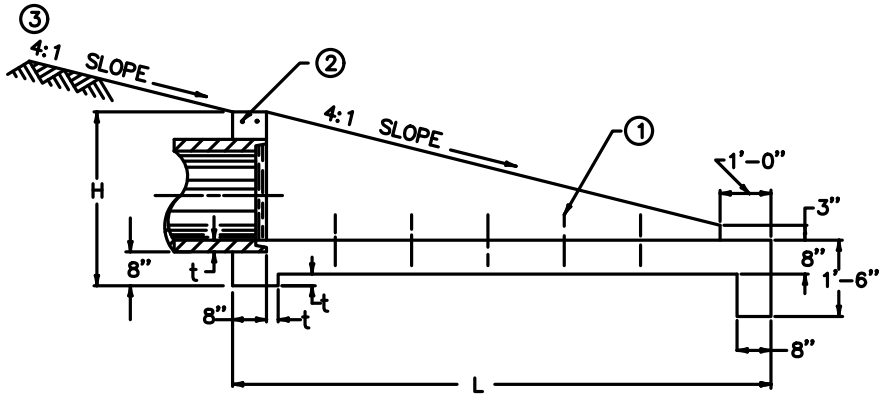

SECTION A-A

– NOTES –

REINFORCING STEEL: GRADE 60, EVENLY SPACED

CONCRETE: 3,500 PSI

① 12 – NO. 4 X 1'-0" DOWEL BARS .

② 2 – NO. 4 X (R DIMENSION MINUS 4") .

③ SLOPES SHALL BE WARPED TO FIT HEADWALL WHEN PIPE IS SKEWED AND/OR NORMAL SLOPE VARIES FROM 4 : 1 .

④ APRON BETWEEN WINGS SHALL BE SLOPED IN DIRECTION OF FLOW EQUAL TO SLOPE OF PIPE . FRONT FACE OF HEADWALL SHALL REMAIN VERTICAL .

⑤ DIMENSIONS AND QUANTITIES ARE BASED ON CONCRETE PIPE AND WILL VARY SLIGHTLY FOR METAL PIPE .

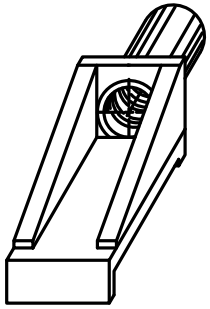

OBLIQUE VIEW

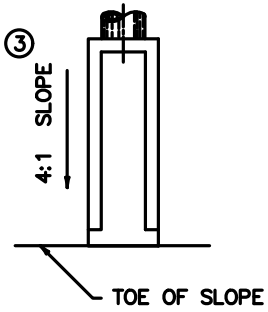

CONDITION NO. 1

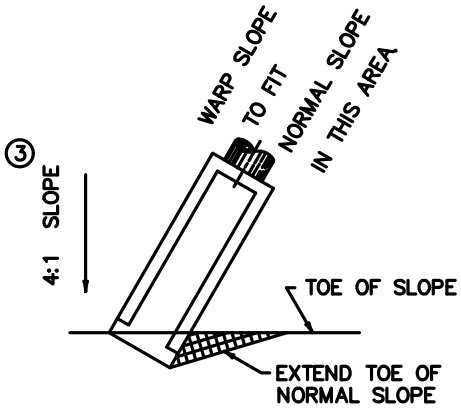

CONDITION NO. 2

PLAN VIEW OF STRUCTURE LOCATIONS

PIPE		DIMENSIONS ⑤				CLASS "A" CONC.	REINF. STEEL
DIA. OR EQUIV. DIA.	SHAPE	H	R	L	t	CU. YD.	LBS.
12"	○	2'-6"	2'-8"	7'-4"	2"	0.93	11
15"	○	2'-10"	3'-0"	8'-5"	2 1/4"	1.20	12
	⬭	2'-6"	3'-3"	7'-1"		1.02	
18"	○	3'-1"	3'-3"	9'-6"	2 1/2"	1.50	
	⬭	2'-9"	3'-7"	8'-0"		1.29	
	⬬	2'-10"	3'-9"	8'-3"	2 3/4"	1.38	13
21"	○	3'-5"	3'-7"	10'-7"		1.84	12

CONCRETE HEADWALLS- 12"-27" SLOPED & PARALLEL (AML 23-10-5)

KY DAML 1-2013

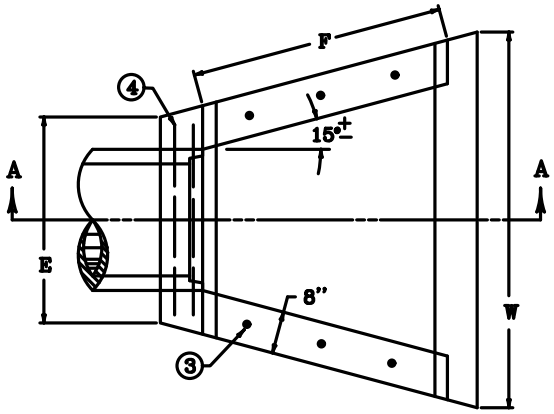

PLAN VIEW

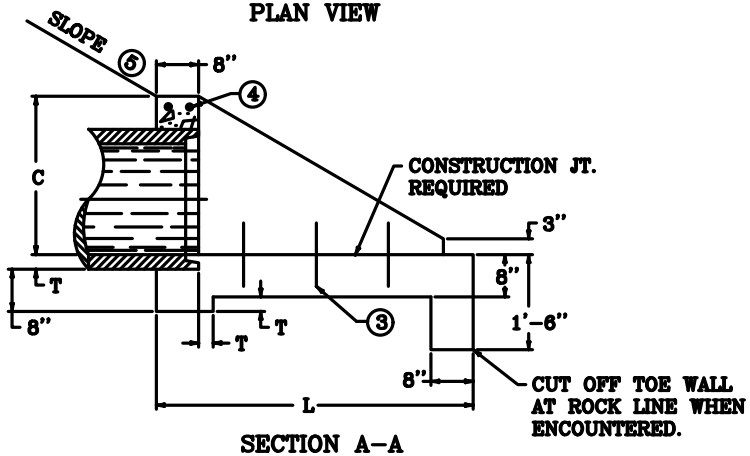

SECTION A–A

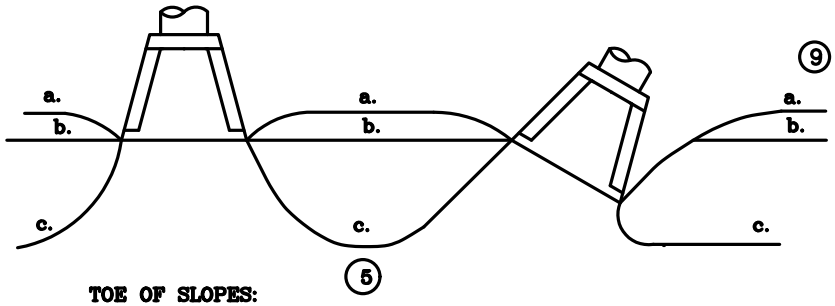

TOE OF SLOPES:
a. STEEPER THAN 2:1
b. 2:1
c. FLATTER THAN 2:1

PIPE		DIMENSIONS						CLASS A CONC	REINF STEEL
DIA. OR EQUIV. DIA.	SHAPE 9	C	E	F	L	W	T	C. Y.	LBS.
12"	○	1'–9"	2'–6"	2'–3"	3'–6"	4'–0"	2"	0.58	7
15"	○	2'–0"	2'–9"	2'–9"	4'–0"	4'–9"	2 1/4"	0.75	
	⬭	1'–9"	3'–0"	2'–6"	3'–6"	4'–9"		0.68	8
18"	○	2'–3"	3'–0"	3'–6"	4'–6"	5'–3"	2 1/2"	0.93	
	⬭	2'–0"	3'–6"	3'–0"	4'–0"	5'–6"	2 3/4"	0.89	
	⬭								
21"	○	2'–6"	3'–3"	4'–0"	5'–0"	6'–0"		1.14	
	⬭	2'–3"	3'–0"	3'–6"	4'–6"	6'–0"		1.07	9
24"	○	2'–9"	3'–6"	4'–6"	5'–6"	6'–6"	3"	1.35	8
	⬭	2'–6"	4'–0"	4'–0"	5'–0"	6'–9"	3 1/4"	1.30	9
	⬭								
27"	○	3'–0"	3'–9"	5'–0"	6'–0"	7'–0"		1.57	
	⬭	2'–9"	4'–6"	4'–3"	5'–3"	7'–3"	3 1/2"	1.51	10

NOTES

1. DIMENSIONS AND QUANTITIES ARE BASED ON CONCRETE PIPE AND WILL VARY INSIGNIFICANTLY FOR CORRUGATED METAL PIPE.
2. REINFORCING STEEL 60 KSI, EVENLY SPACED; CONCRETE 3,500 PSI
3. 6 – NO. 4 x 1'–0" DOWEL BARS.
4. 2 – NO. 4 x (E DIMENSION MINUS 4").
5. SLOPES SHALL BE WARPED TO FIT HEADWALL WHEN PIPE IS SKEWED AND/OR NORMAL SLOPE VARIES FROM 2:1.
6. VOLUME DISPLACED BY PIPE COMPUTED USING INSIDE DIAMETER OF PIPE.
7. WING ANGLES AND/OR DIMENSIONS MAY BE ALTERED DURING CONSTRUCTION TO ACCOMMODATE FLOW OF WATER.
8. APRON BETWEEN WINGS SHALL BE SLOPED IN DIRECTION OF FLOW EQUAL TO SLOPE OF PIPE. FRONT FACE OF HEADWALL SHALL REMAIN VERTICAL.
9. HEADWALLS ARE FOR CIRCULAR, ARCH, AND HORIZONTAL ELLIPTICAL 12"– 27" EQUIVALENT PIPE SIZES.

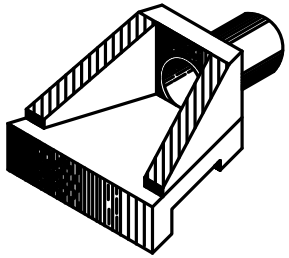

ISOMETRIC VIEW

USE WITH AML 23–10–11

CONCRETE HEADWALLS- 12"-27" SLOPED & FLARED (AML 23-10-6)

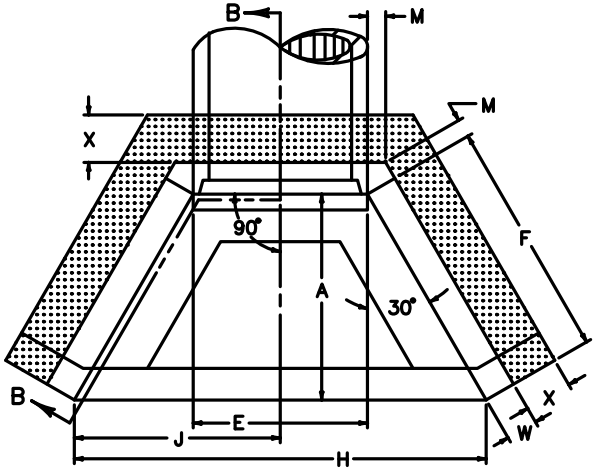

PLAN VIEW

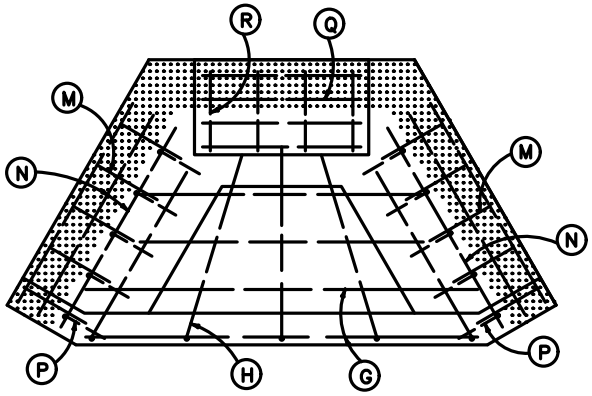

SECTION A–A

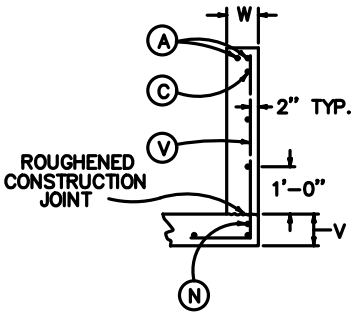

WING SECTION
30" TO 60" CIRCULAR PIPE
30" TO 72" NON–CIRCULAR PIPE

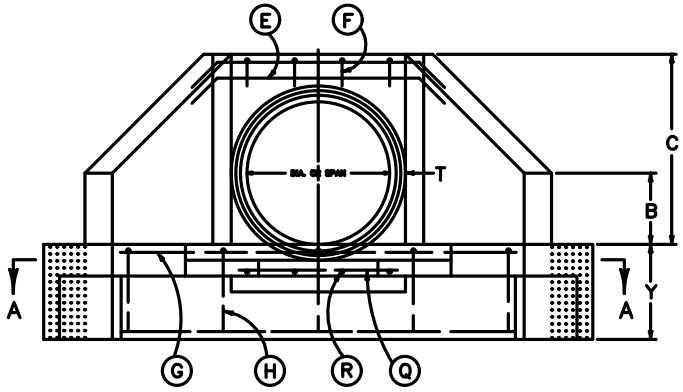

FRONT ELEVATION

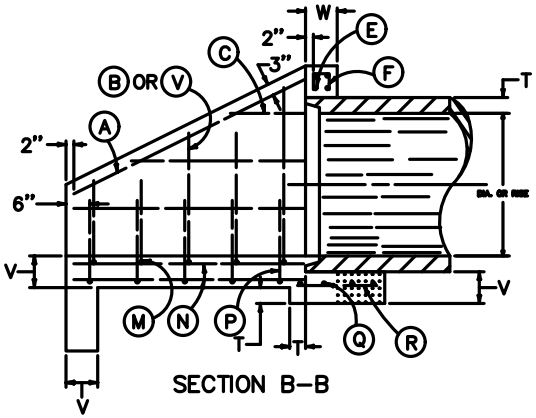

SECTION B–B

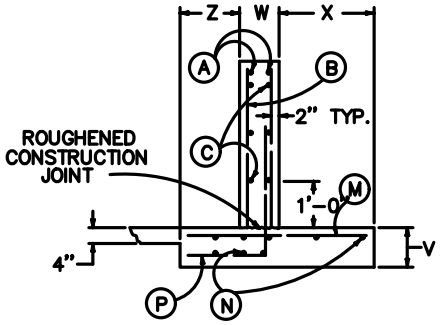

WING SECTION
66" TO 108" CIRCULAR PIPE

1. DIMENSIONS FROM FACE OF CONCRETE TO STEEL SHALL BE 2" CLEAR DISTANCE.
2. ENCIRCLED LETTERS, ◯, INDICATE STEEL BAR LOCATIONS
3. BARS Ⓑ, Ⓒ, Ⓖ, Ⓟ, Ⓜ, Ⓥ ARE SPACED 1'–0" O.C. ALL OTHER BARS SHALL BE EVENLY SPACED.
4. BARS Ⓑ AND Ⓥ ARE PLACED IN ORDER OF INCREASING LENGTHS, BEGINNING AT THE END OF EACH WING.
5. BARS Ⓒ ARE PLACED IN ORDER OF INCREASING LENGTHS, BEGINNING AT THE TOP OF EACH WING.
6. APRON BETWEEN WINGS SHALL BE SLOPED IN DIRECTION OF FLOW EQUAL TO SLOPE OF PIPE. FRONT FACE OF HEADWALL AND ENDS OF WINGS SHALL REMAIN VERTICAL.
7. CONCRETE– 3,500 PSI; STEEL– 60 KSI

USE WITH AML 23–10–8, 9, 11

CONCRETE HEADWALLS- ≥30" SLOPED & PARALLEL (AML 23-10-7)

NOTES:
1. NO. = NUMBER OF BARS IN ONE HEADWALL.
2. DIMENSIONS ARE O. TO O. OF BARS.
3. ALL BARS ARE STRAIGHT EXCEPT THOSE SHOWN BELOW.

CIRCULAR & NON-CIRCULAR HEADWALL DIMENSIONS					
DIMENSION	DIAMETER OF PIPE				DIMENSION
	30"	36"	48"	60"	
A	3'-9"	4'-11"	5'-6"	6'-8"	A
B	1'-3"	1'-6"	2'-0"	2'-6"	B
C	3'-6"	4'-0"	5'-1"	6'-2"	C
E	3'-1"	3'-8"	4'-10"	6'-0"	E
F	4'-4"	5'-0"	6'-4"	7'-8"	F
H	7'-6"	8'-8"	11'-2"	13'-8"	H
J	3'-9"	4'-4"	5'-7"	6'-10"	J
M	0'-5"				M
T	0'-3.5"	0'-4.0"	0'-4.5"	0'-5.0"	T
V	0'-8"				V
W	0'-8"				W
X	----				X
Y	2'-0"				Y
Z	----				Z
CYD CONCRETE	3.36	4.3	6.53	9.22	FOR 2
LBS. STEEL	281	363	496	687	HEADWALLS

BENT BAR SHAPES FOR CIRCULAR PIPE HEADWALLS

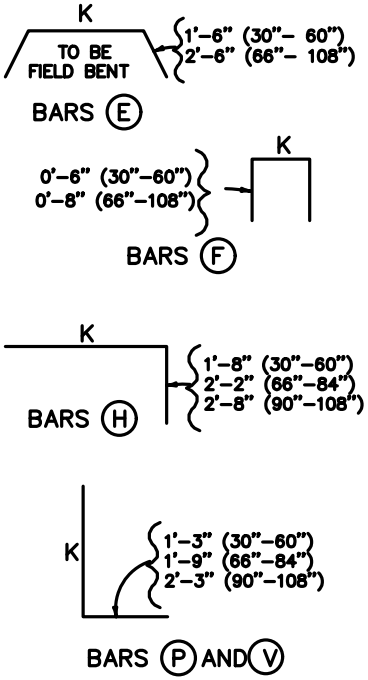

BENT BAR SHAPES FOR NON-CIRCULAR PIPE HEADWALLS

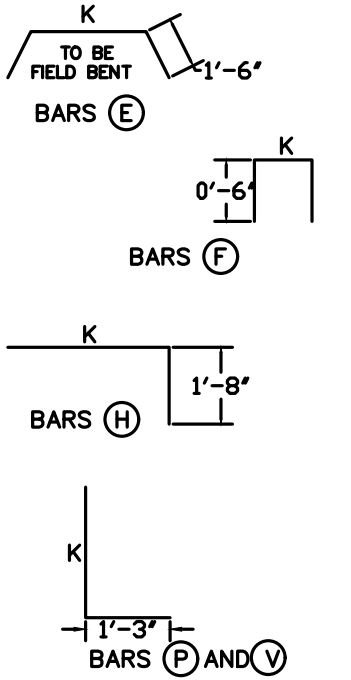

USE WITH AML 23-10-7

CONCRETE HEADWALLS- ≥30" SLOPED & FLARED DIMENSIONS (AML 23-10-8)

KY DAML 12-2014

REINFORCEMENT FOR CIRCULAR PIPES				
30"				
MARK	SIZE	NO BARS	LENGTH	k
A	5	4	4'-8"	
C1	4	2	2'-4"	
C2	4	2	4'-2"	
E1	5	2	6'-4"	3'-4"
E2	5	2	6'-8"	3'-8"
F	4	3	1'-3"	0'-4"
G1	4	2	3'-10"	
G2	4	3	6'-2"	
H	4	4	5'-1"	3'-5"
N	4	6	4'-2"	
Q	4	2	2'-9"	
R	4	3	0'-8"	
V1	5	4	3'-1"	1'-10"
V2	5	4	4'-1"	2'-10"

36"				
MARK	SIZE	NO	LENGTH	k
A	5	4	5'-5"	
C1	4	2	1'-7"	
C2	4	2	3'-8"	
C3	4	2	4'-10"	
E1	5	2	6'-11"	3'-11"
E2	5	2	7'-3"	4'-3"
F	4	4	1'-3"	0'-4"
G1	4	3	5'-0"	
G2	4	3	7'-4"	
H	4	5	5'-8"	4'-0"
N	4	6	4'-10"	
Q	4	2	3'-4"	
R	4	4	0'-8"	
V1	5	4	3'-4"	2'-1"
V2	5	4	4'-4"	3'-1"
V3	5	2	5'-4"	4'-1"

REINFORCEMENT FOR CIRCULAR PIPES				
48"				
MARK	SIZE	NO BARS	LENGTH	k
A	5	4	6'-11"	
C1	4	2	1'-10"	
C2	4	2	3'-10"	
C3	4	2	5'-10"	
C4	4	2	6'-2"	
E1	5	2	8'-1"	5'-1"
E2	5	2	8'-5"	5'-5"
F	4	5	1'-3"	0'-4"
G1	4	1	4'-0"	
G2	4	3	7'-5"	
G3	4	3	9'-9"	
H	4	6	6'-10"	5'-2"
N	4	6	6'-2"	
Q	4	2	4'-6"	
R	4	5	0'-9"	
V1	5	4	3'-9"	2'-6"
V2	5	4	4'-9"	3'-6"
V3	5	4	5'-9"	4'-6"

60"				
MARK	SIZE	NO	LENGTH	k
A	5	4	8'-4"	
C1	4	2	2'-1"	
C2	4	2	4'-2"	
C3	4	2	6'-3"	
C4	4	4	7'-7"	
E1	5	2	9'-3"	6'-3"
E2	5	2	9'-7"	6'-7"
F	4	6	1'-3"	0'-4"
G1	4	2	6'-6"	
G2	4	3	10'-0"	
G3	4	3	12'-4"	
H	4	7	8'-0"	6'-4"
N	4	6	7'-7"	
Q	4	2	5'-8"	
R	4	6	0'-10"	
V1	5	4	4'-3"	3'-0"
V2	5	4	5'-3"	4'-0"
V3	5	4	6'-2"	4'-11"
V4	5	4	7'-2"	5'-11"

REINFORCEMENT FOR NON-CIRCULAR PIPES				
30"				
MARK	SIZE	NO BARS	LENGTH	k
A	5	4	4'-1"	
C1	4	2	1'-5"	
C2	4	2	3'-5"	
E1	5	2	7'-0"	4'-0"
E2	5	2	7'-5"	4'-5"
F	4	4	1'-3"	0'-4"
G1	4	2	4'-0"	
G2	4	3	6'-4"	
H	4	4	4'-10"	3'-2"
N	4	6	3'-8"	
Q	4	2	3'-5"	
R	4	4	0'-8"	
V1	5	4	2'-10"	1'-7"
V2	5	4	3'-11"	2'-8"

36"				
MARK	SIZE	NO	LENGTH	k
A	5	4	4'-9"	
C1	4	2	2'-7"	
C2	4	2	4'-3"	
C3	Not Applicable			
E1	5	2	7'-8"	4'-8"
E2	5	2	8'-1"	5'-1"
F	4	5	1'-3"	0'-4"
G1	4	2	5'-3"	
G2	4	3	7'-8"	
H	4	4	5'-4"	3'-8"
N	4	6	4'-3"	
Q	4	2	4'-2"	
R	4	5	0'-8"	
V1	5	4	3'-1"	1'-10"
V2	5	4	4'-1"	2'-10"
V3	Not Applicable			

REINFORCEMENT FOR NON-CIRCULAR PIPES				
48"				
MARK	SIZE	NO BARS	LENGTH	k
A	5	4	5'-11	
C1	4	2	2'-4"	
C2	4	2	4'-4"	
C3	4	2	5'-4"	
C4	Not Applicable			
E1	5	2	9'-1"	6'-1"
E2	5	2	9'-6"	6'-6"
F	4	7	1'-3"	0'-4"
G1	4	1	5'-4"	
G2	4	2	7'-8"	
G3	4	3	9'-11"	
H	4	6	6'-3"	4'-7"
N	4	6	5'-4"	
Q	4	2	5'-7"	
R	4	6	0'-10"	
V1	5	4	3'-5"	2'-2"
V2	5	4	4'-5"	3'-2"
V3	5	2	5'-5"	4'-2"

60"				
MARK	SIZE	NO	LENGTH	k
A	5	4	7'-2"	
C1	4	2	2'-2"	
C2	4	2	4'-3"	
C3	4	2	6'-4"	
C4	4	2	6'-6"	
E1	5	2	10'-7"	7'-7"
E2	5	2	11'-0"	8'-0"
F	4	8	1'-3"	0'-4"
G1	4	2	8'-1"	
G2	4	2	10'-4"	
G3	4	3	12'-8"	
H	4	7	7'-4"	5'-8"
N	4	6	6'-6"	
Q	4	2	7'-1"	
R	4	7	0'-10"	
V1	5	4	3'-10"	2'-7"
V2	5	4	4'-10"	3'-7"
V3	5	4	5'-9"	4'-6"
V4	5	2	6'-9"	5'-6"

USE WITH AML 23–10–7

CONCRETE HEADWALLS- ≥30" SLOPED & FLARED REINFORCEMENT (AML 23-10-9)

GENERAL NOTES:

1. ALL CONCRETE IS 3,500 PSI (MIN.) WITH FIBER REINFORCEMENT.
2. STEEL REINFORCEMENT IS 60 KSI STRENGTH
3. MINIMUM 2" CLEAR DISTANCE OVER REINFORCING STEEL
4. ¾" CHAMPFER ON ALL EXPOSED SURFACES

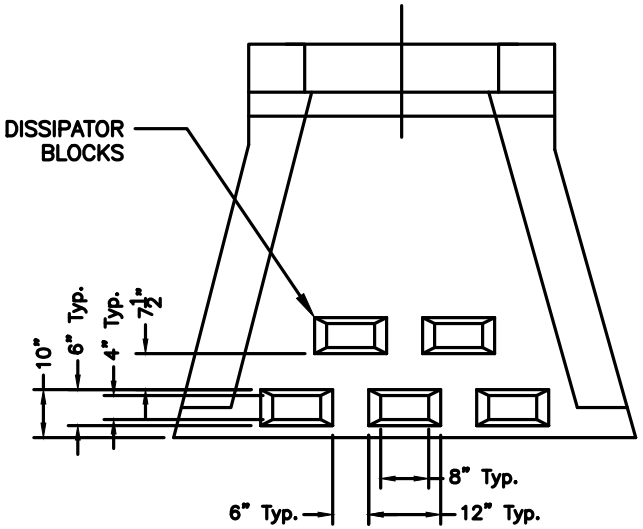

PLAN VIEW

PIPE DIA.	NO. OF DISSPATORS
12"	3
15"	
18"	
24"+	5

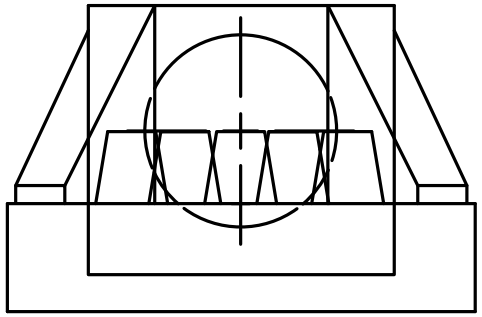

FRONT VIEW

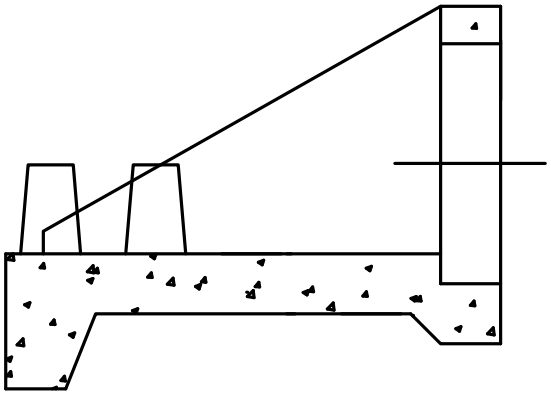

SECTION A-A

CULVERT HEADWALL- DISSIPATERS (AML 23-10-10)

KY DAML 1-2013

FLARED END SECTION PLAN

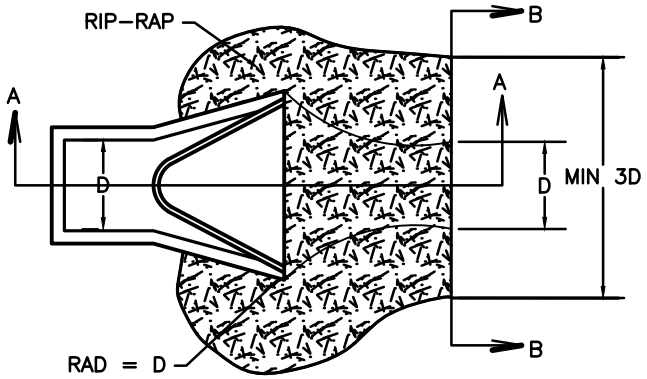

HEADWALL PLAN

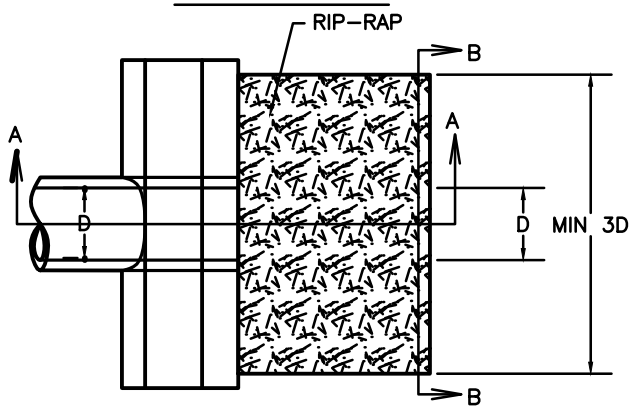

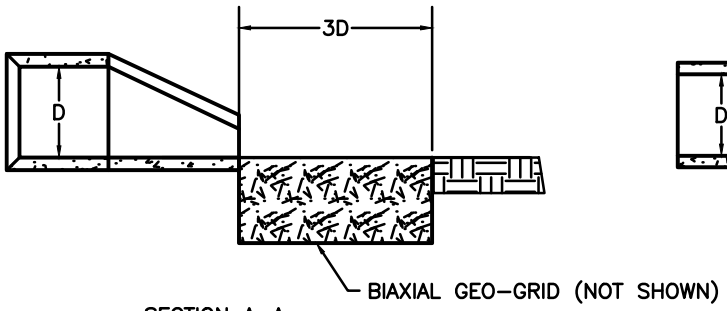

SECTION A–A

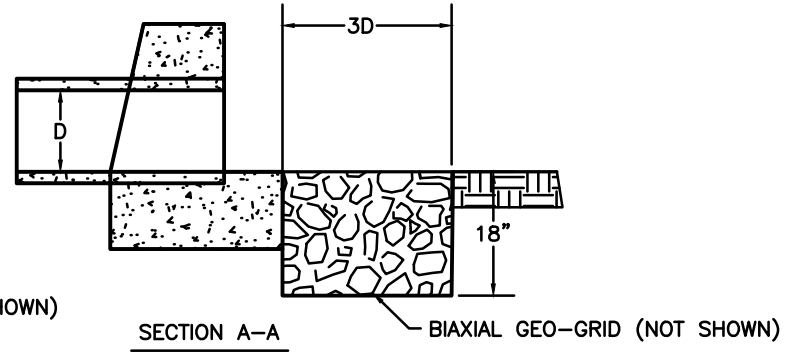

SECTION A–A

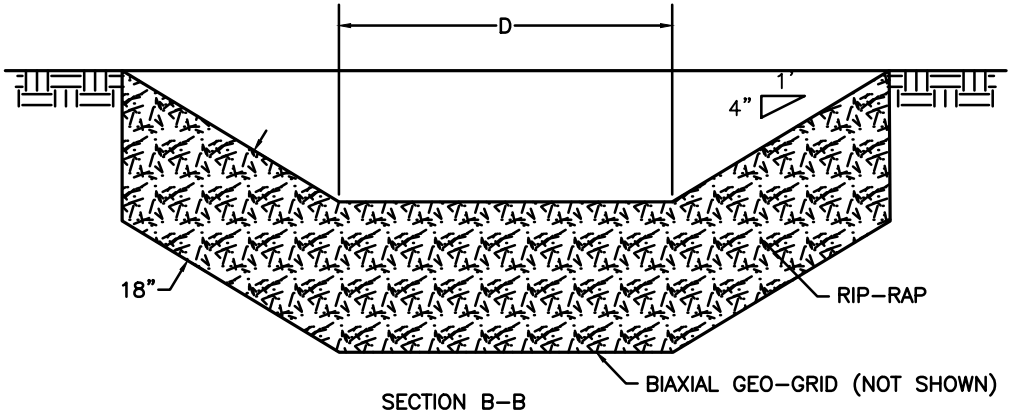

SECTION B–B

DISCHARGE AREA EROSION CONTROL (AML 23-10-11)

KY DAML 1–2013

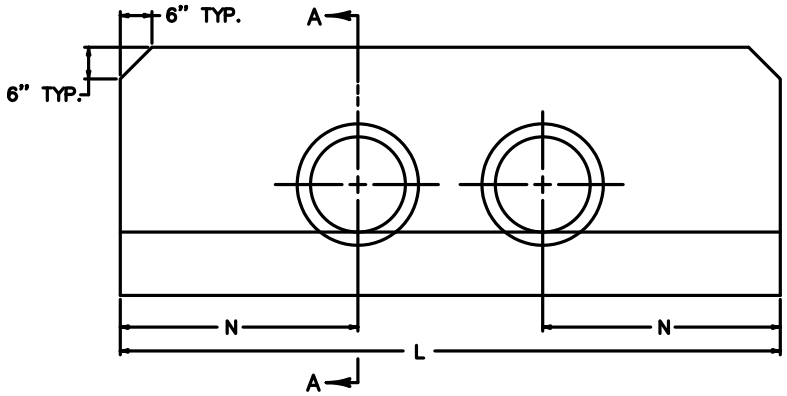

DOUBLE PIPE ELEVATION VIEW

DIMENSIONS AND QUANTITIES									
TYPE	PIPE DIA.	A	B	C	E	L	M	N	CUBIC YARDS CONCRETE PER 2 HEADWALLS
STANDARD DOUBLE	18"	1'-9"	1'-3"	4'-6"	3'-0"	10'-5"	10 3/4"	3'-9"	4.18
	24"	1'-10"	1'-4"	5'-0"	3'-6"	12'-6"	10 3/4"	4'-6"	5.65
STANDARD TRIPLE	18"	1'-9"	1'-3"	4'-6"	3'-0"	13'-4"	10 3/4"	3'-9"	4.87
	24"	1'-10"	1'-4"	5'-0"	3'-6"	16'-0"	10 3/4"	4'-6"	6.68

NOTES:

1. USE 3,500 PSI CONCRETE WITH FIBER REINFORCEMENT.
2. VOLUME DISPLACED BY BARREL OF PIPE HAS BEEN COMPUTED USING INSIDE DIAMETER OF PIPE. NO DEDUCTION HAS BEEN MADE FOR BEVELED EDGES.
3. WHEN HEADWALLS ARE LOCATED AT THE EDGE OF SHOULDER, THE TOP OF THE HEADWALLS SHALL BE PARALLEL TO THE EDGE OF THE SHOULDER.
4. CAST IN PLACE UNLESS APPROVED OTHERWISE BY THE ENGINEER.

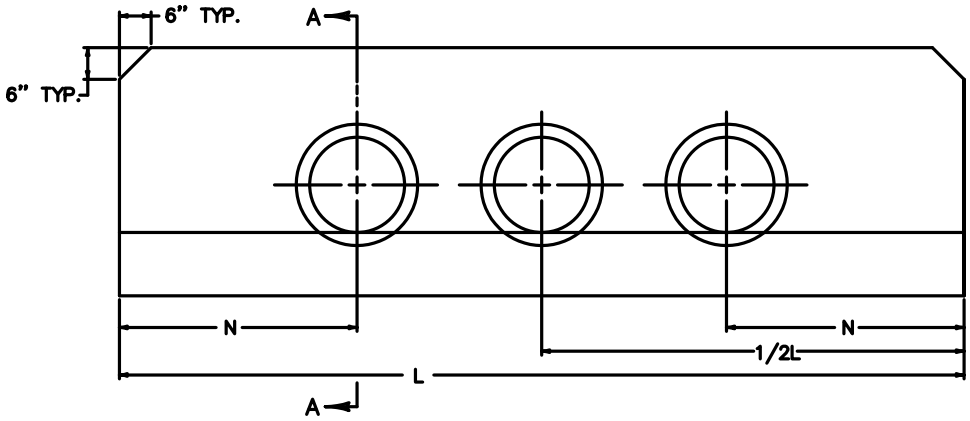

TRIPLE PIPE ELEVATION VIEW

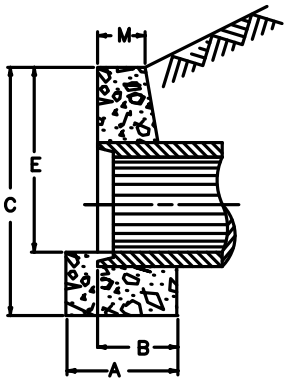

SECTION A–A

USE WITH AML 23–10–11

CONCRETE HEADWALLS- 18"-24" MULTIPLE BARREL (AML 23-20-1)

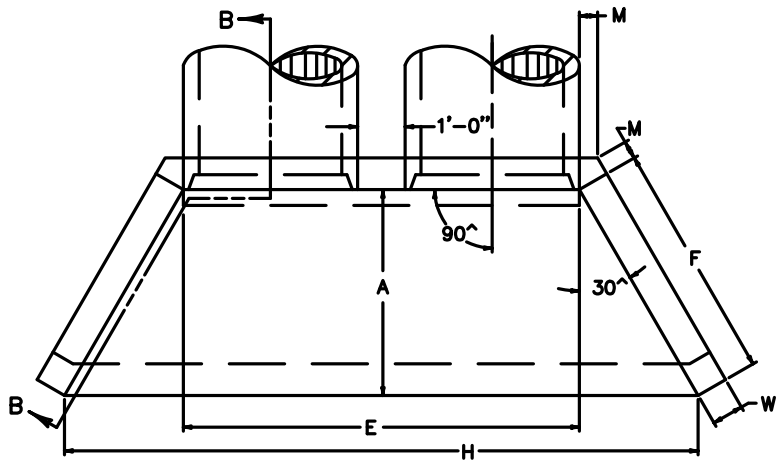

PLAN VIEW

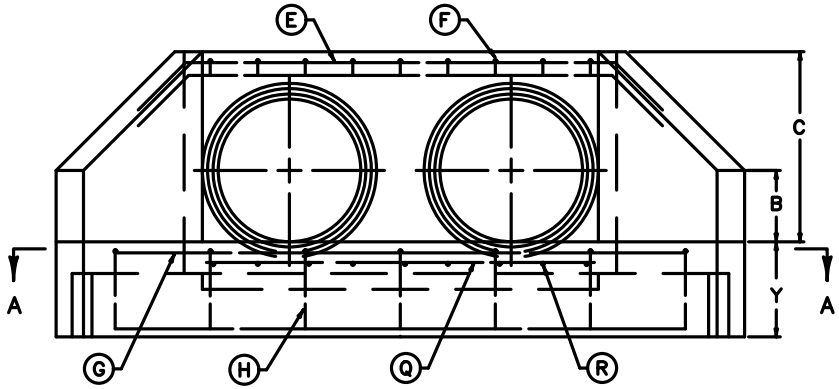

FRONT ELEVATION

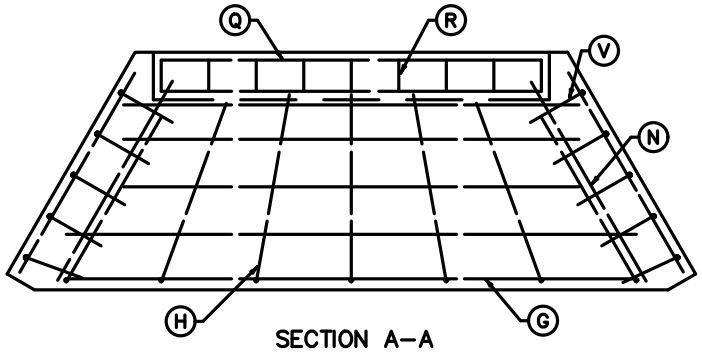

SECTION A–A

~ NOTES ~

1. ENCIRCLED LETTERS, ◯ INDICATE STEEL BAR LOCATIONS.
2. BARS Ⓒ, Ⓖ, Ⓥ, ARE SPACED 1'–0" O.C. ALL OTHER BARS SHALL BE EVENLY SPACED.
3. BARS Ⓥ ARE PLACED IN ORDER OF INCREASING LENGTHS, BEGINNING AT THE END OF EACH WING.
4. BARS Ⓒ ARE PLACED IN ORDER OF INCREASING LENGTHS, BEGINNING AT THE TOP OF EACH WING.
5. HEADWALLS LOCATED AT EDGE OF SHOULDER SHALL BE PARALLEL TO CENTERLINE OF THE ROAD.
6. APRON BETWEEN WINGS SHALL BE SLOPED IN DIRECTION OF FLOW EQUAL TO SLOPE OF PIPE. FRONT FACE OF HEADWALL AND ENDS OF WINGS SHALL REMAIN VERTICAL.
7. DIMENSIONS FROM FACE OF CONCRETE TO STEEL SHALL BE 2" CLEAR DISTANCE.
8. CAST IN PLACE UNLESS APPROVED OTHERWISE BY THE ENGINEER.
9. CONCRETE– 3,500 PSI; STEEL– 60 KSI

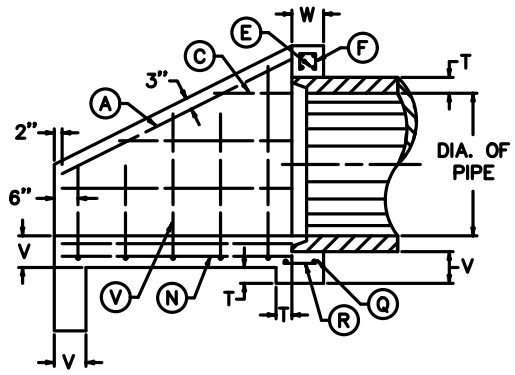

SECTION B–B

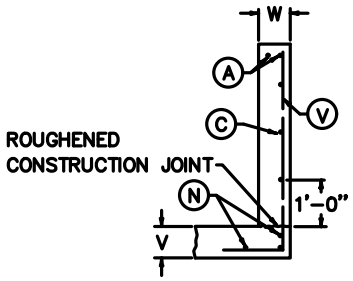

WING SECTION

USE WITH AML 23–20–4 & 23–20–5

CONCRETE HEADWALL- 30"-48" DOUBLE BARREL (AML 23-20-2)

KY DAML 1–2013

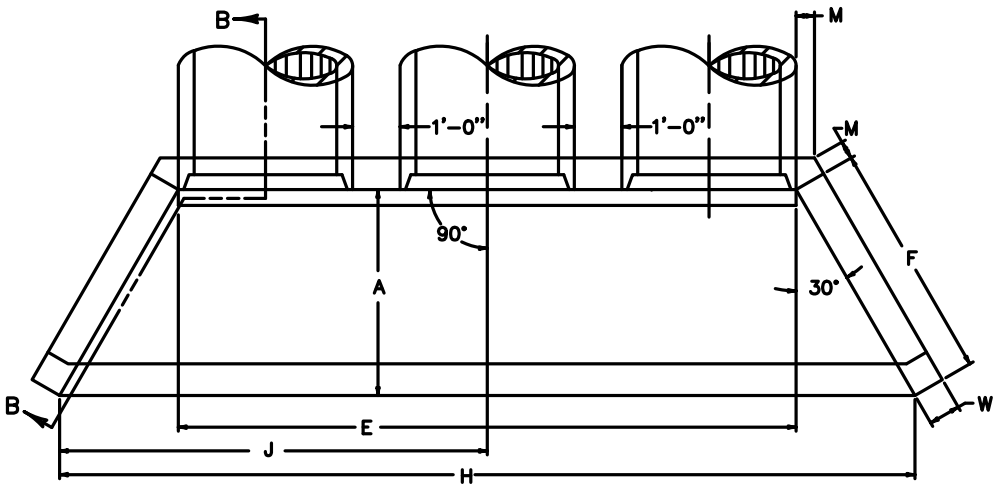

PLAN VIEW

NOTES:

1. ENCIRCLED LETTERS, ◯, INDICATE STEEL BAR LOCATIONS.
2. BARS (C) (G) (V) ARE SPACED 1'-0" O.C. ALL OTHER BARS SHALL BE EVENLY SPACED.
3. BARS (V) ARE PLACED IN ORDER OF INCREASING LENGTHS, BEGINNING AT THE END OF EACH WING.
4. BARS (C) ARE PLACED IN ORDER OF INCREASING LENGTHS, BEGINNING AT THE TOP OF EACH WING.
5. HEADWALLS LOCATED AT EDGE OF SHOULDER SHALL BE PARALLEL TO CENTERLINE OF THE ROAD.
6. APRON BETWEEN WINGS SHALL BE SLOPED IN DIRECTION OF FLOW EQUAL TO SLOPE OF PIPE. FRONT FACE OF HEADWALL AND ENDS OF WINGS SHALL REMAIN VERTICAL.
7. DIMENSIONS FROM FACE OF CONCRETE TO STEEL SHALL BE 2" CLEAR DISTANCE.
8. CAST IN PLACE UNLESS APPROVED OTHERWISE BY THE ENGINEER.
9. CONCRETE– 3,500 PSI, STEEL 60 KSI

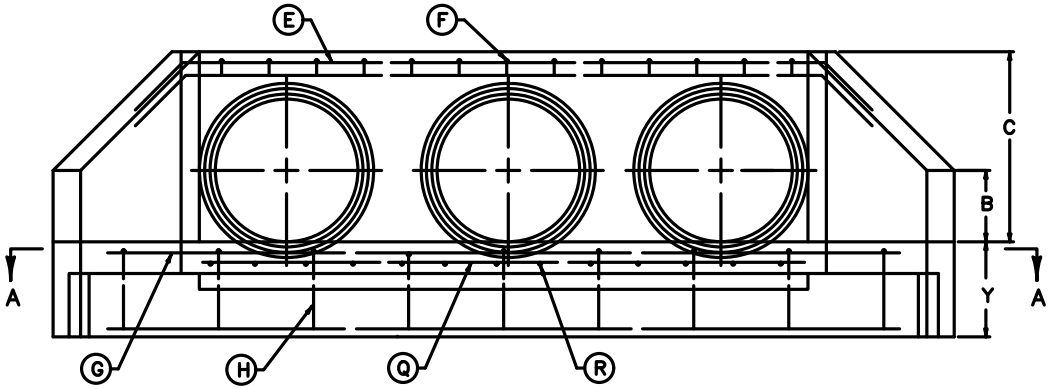

FRONT ELEVATION

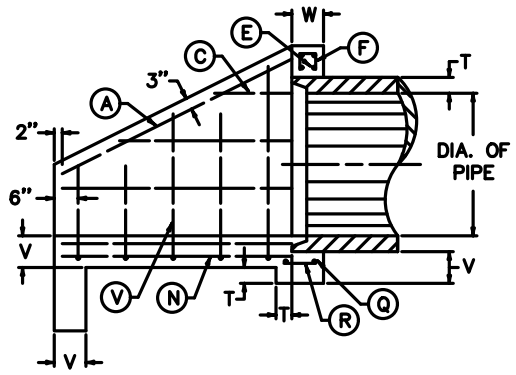

SECTION B–B

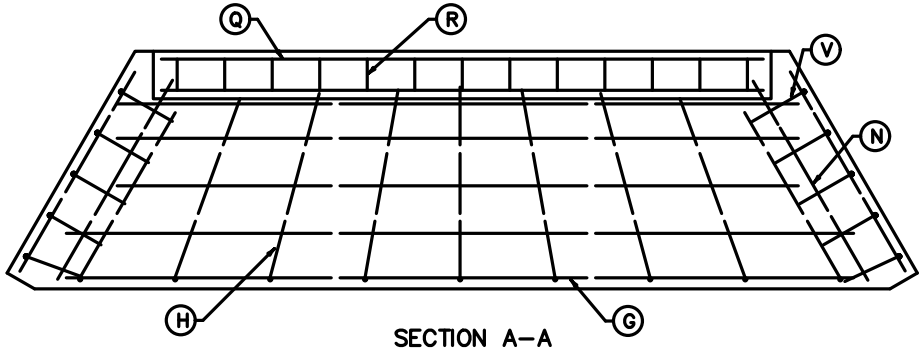

SECTION A–A

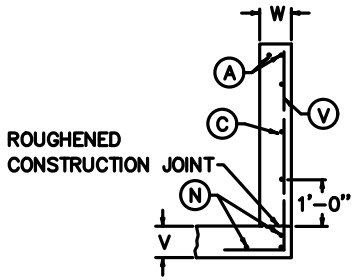

WING SECTION

USE WITH AML 23–20–4 & 23–20–5

CONCRETE HEADWALLS- 30"-48" TRIPLE BARREL (AML 23-20-3)

KY DAML 1–2013

DIMENSIONS FOR MULTIPLE PIPE HEADWALLS							
DIMENSION	DOUBLE			TRIPLE			DIMENSION
	30"	36"	48"	30"	36"	48"	
A	3'-9"	4'-4"	5'-6"	3'-9"	4'-4"	5'-6"	A
B	1'-3"	1'-6"	2'-0"	1'-3"	1'-6"	2'-0"	B
C	3'-6"	4'-0"	5'-1"	3'-6"	4'-0"	5'-1"	C
E	7'-2"	8'-4"	10'-8"	11'-3"	13'-0"	16'-6"	E
F	4'-4"	5'-0"	6'-4"	4'-4"	5'-0"	6'-4"	F
H	11'-6"	13'-4"	17'-0"	15'-6"	18'-0"	22'-10"	H
J	---	---	---	7'-9"	9'-0"	11'-5"	J
M	0'-5"			0'-5"			M
T	0'-3.5"	0'-4.0"	0'-5"	0'-3.5"	0'-4.0"	0'-5"	T
V	0'-8"			0'-8"			V
W	0'-8"			0'-8"			W
Y	2'-0"			2'-0"			Y
CYD CONCRETE	4.91	6.22	9.38	6.49	8.2	12.3	FOR 2 HEADWALLS
LBS. STEEL	379	480	660	475	594	797	
DIMENSIONS AND QUANITITES ARE BASED ON CONCRETE PIPE AND WILL VARY SLIGHTLY FOR CORRUGATED METAL PIPE.							

NOTES:

1. DIMENSIONS ARE O. TO O. OF BAR
2. ALL BARS ARE STRAIGHT EXCEPT THOSE SHOWN BELOW

BENT BAR SHAPES

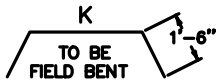

BARS (E)

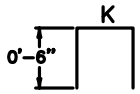

BARS (F)

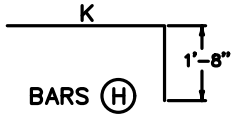

BARS (H)

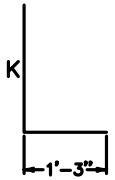

BARS (V)

USE WITH AML 23-20-2 & AML 23-20-3

CONCRETE HEADWALL- MULTIPLE PIPE DIMENSIONS (AML 23-20-4)

KY DAML 1-2013

REINFORCEMENT FOR DOUBLE BARREL

30"				
MARK	SIZE	NO BARS	LENGTH	k
A	5	4	4'-8"	
C1	4	2	2'-4"	
C2	4	2	4'-2"	
E1	5	2	10'-6"	7'-6"
E2	5	2	10'-8"	7'-8"
F	4	8	1'-3"	0'-4"
G1	4	2	7'-8"	
G2	4	3	10'-0"	
H	4	6	5'-1"	3'-5"
N	4	6	4'-2"	
Q	4	2	7'-1"	
R	4	8	0'-8"	
V1	5	4	3'-1"	1'-10"
V2	5	4	4'-1"	2'-10"

36"				
MARK	SIZE	NO BARS	LENGTH	k
A	5	4	5'-5"	
C1	4	2	1'-7"	
C2	4	2	3'-8"	
C3	4	2	4'-10"	
E1	5	2	11'-8"	8'-8"
E2	5	2	11'-10"	8'-10"
F	4	9	1'-3"	0'-4"
G1	4	3	9'-7"	
G2	4	3	12'-0"	
H	4	7	5'-8"	4'-0"
N	4	6	4'-10"	
Q	4	2	8'-2"	
R	4	9	0'-8"	
V1	5	4	3'-4"	2'-1"
V2	5	4	4'-4"	3'-1"
V3	5	2	5'-4"	4'-1"

48"				
MARK	SIZE	NO BARS	LENGTH	k
A	5	4	6'-11	
C1	4	2	1'-10"	
C2	4	2	3'-10"	
C3	4	2	5'-10"	
C4	4	2	6'-2"	
E1	5	2	14'-0"	11'-0"
E2	5	2	14'-2"	11'-2"
F	4	11	1'-3"	0'-4"
G1	4	1	11'-0"	
G2	4	3	13'-3"	
G3	4	3	15'-7"	
H	4	9	16'-10"	5'-2"
N	4	6	6'-2"	
Q	4	2	10'-4"	
R	4	11	0'-9"	
V1	5	4	3'-9"	2'-6"
V2	5	4	4'-9"	3'-6"
V3	5	4	5'-9"	4'-6"

REINFORCEMENT FOR TRIPLE BARREL

30"				
MARK	SIZE	NO BARS	LENGTH	k
A	5	4	4'-8"	
C1	4	2	2'-4"	
C2	4	2	4'-2"	
E1	5	2	14'-7"	11'-7"
E2	5	2	14'-9"	11'-9"
F	4	12	1'-3"	0'-4"
G1	4	2	11'-10"	
G2	4	3	14'-1"	
H	4	8	5'-1"	3'-5"
N	4	6	4'-2"	
Q	4	2	11'-1"	
R	4	12	0'-8"	
V1	5	4	3'-1"	1'-10"
V2	5	4	4'-1"	2'-10"

36"				
MARK	SIZE	NO BARS	LENGTH	k
A	5	4	5'-5"	
C1	4	2	1'-7"	
C2	4	2	3'-8"	
C3	4	2	4'-10"	
E1	5	2	16'-4"	13'-4"
E2	5	2	16'-6"	13'-6"
F	4	13	1'-3"	0'-4"
G1	4	3	14'-4"	
G2	4	3	16'-8"	
H	4	9	5'-8"	4'-0"
N	4	6	4'-10"	
Q	4	2	12'-8"	
R	4	13	0'-8"	
V1	5	4	3'-4"	2'-1"
V2	5	4	4'-3"	3'-1"
V3	5	2	4'-4"	4'-1"

48"				
MARK	SIZE	NO BARS	LENGTH	k
A	5	4	6'-11"	
C1	4	2	1'-10"	
C2	4	2	3'-10"	
C3	4	2	5'-10"	
C4	4	2	6'-2"	
E1	5	2	19'-10"	16'-10"
E2	5	2	20'-0"	17'-10"
F	4	17	1'-3"	0'-4"
G1	4	1	16'-9"	
G2	4	3	19'-0"	
G3	4	3	21'-5"	
H	4	12	6'-11"	5'-3"
N	4	6	6'-2"	
Q	4	6	16'-2"	
R	4	17	0'-9"	
V1	5	4	3'-9"	2'-6"
V2	5	4	4'-9"	3'-6"
V3	5	4	5'-9"	4'-6"

USE WITH AML 23–20–2 & AML 23–20–3

CONCRETE HEADWALLS- MULTIPLE PIPE REINFORCEMENT (AML 23-20-5)

NOTE: PIPE IS SET IN BOTTOM OF DITCH. USE MEDIUM WEIGHT NON-WOVEN FILTER FABRIC AROUND GABIONS / SOIL INTERFACE.

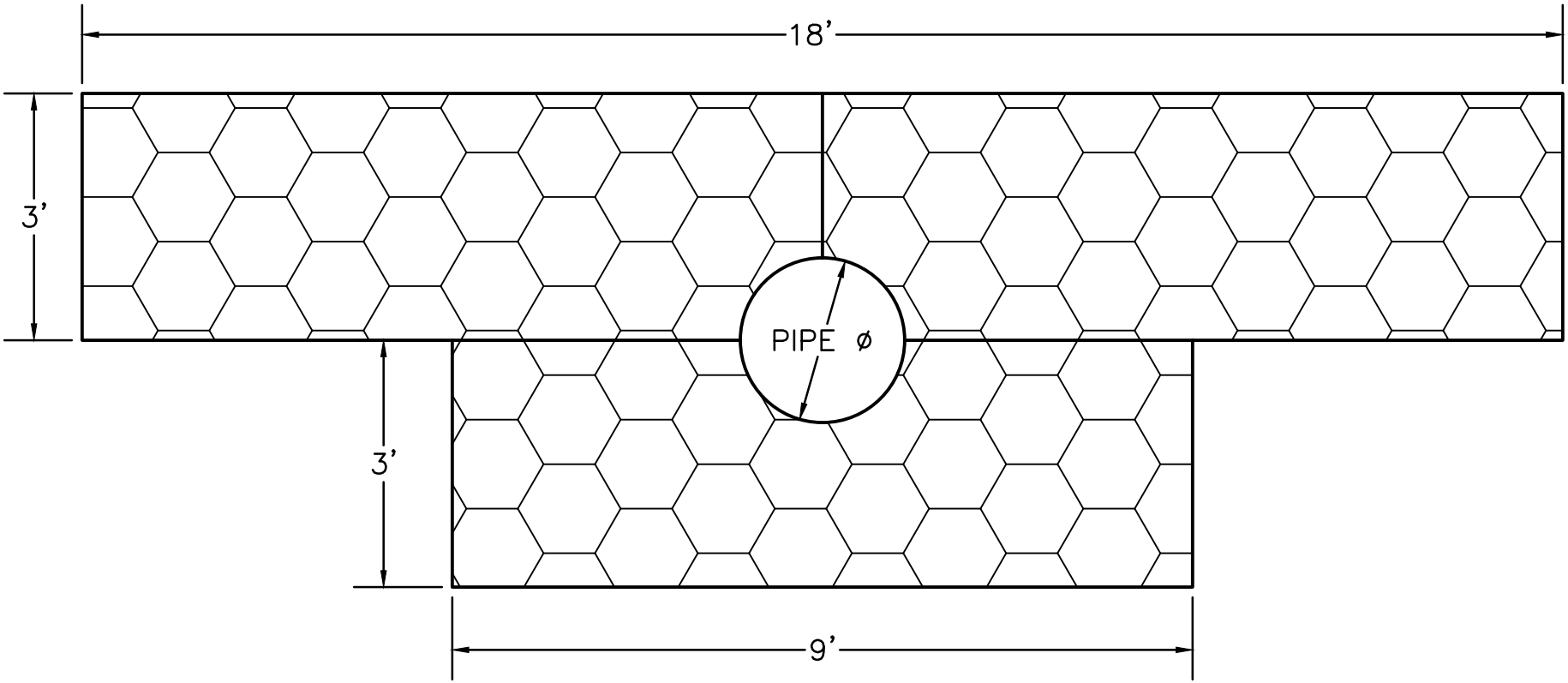

GABION HEADWALL (AML 23-30-1)

KY DAML 1-2013

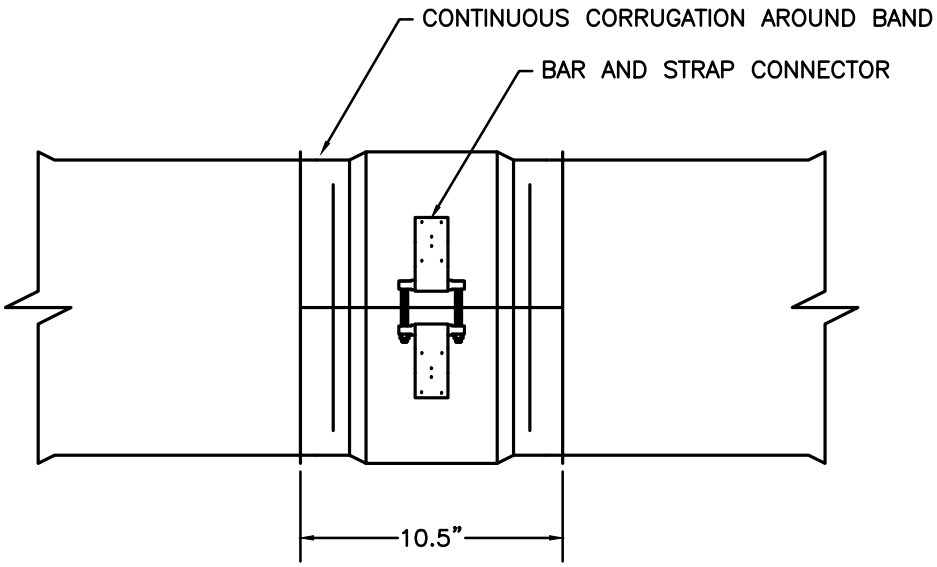

HUGGER JOINT

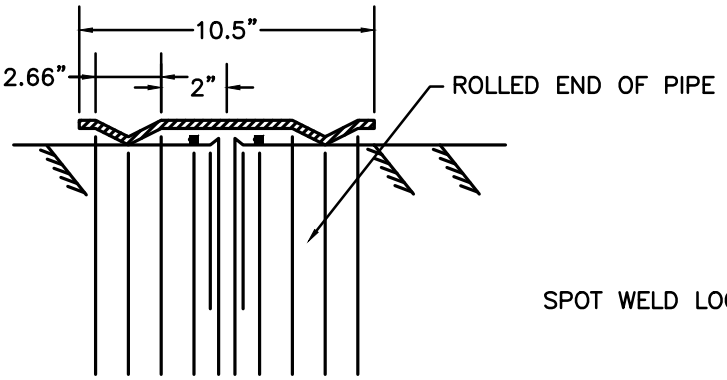

JOINT CROSS SECTION

O–RING GASKETS MAY BE PROVIDED FOR SPECIAL APPLICATIONS

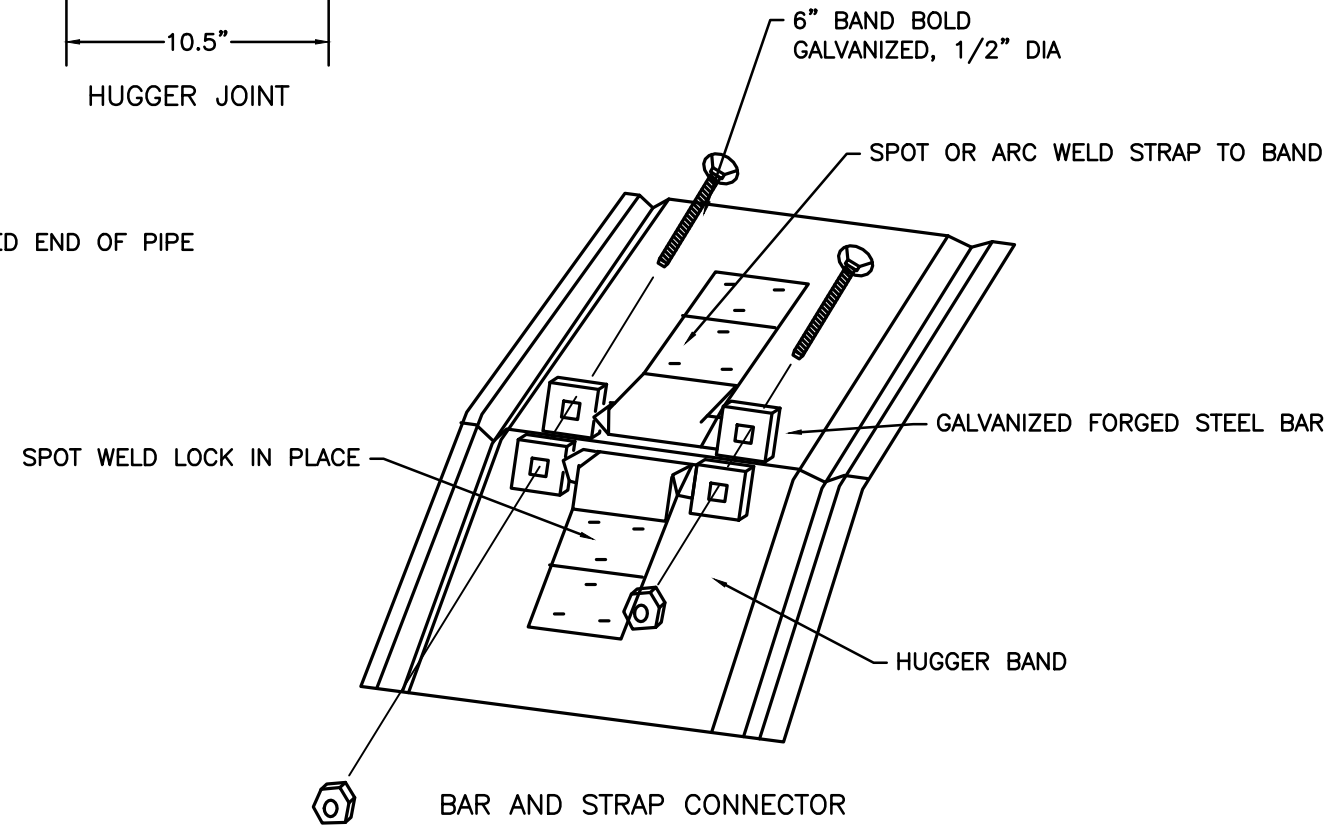

CMP JOINTS (AML 23-40-1)

KY DAML 1–2013

INTERMEDIATE ANCHOR FOR PIPE (3,500 PSI CONCRETE)

	% GRADE	12"	15"	18"	24"	30"	36"	48"	60"	72"
VOLUME (CYDS) CLASS A CONCRETE FOR 1 ANCHOR	0	0.68	0.86	1.07	1.59	2.25	3.06	7.41	11.28	18.34
	10	0.72	0.91	1.13	1.68	2.38	3.24	7.83	11.79	19.27
	20	0.75	0.96	1.19	1.78	2.52	3.43	8.28	12.24	20.11
	30	0.79	1.01	1.26	1.88	2.67	3.65	8.78	12.64	20.87
	40	0.84	1.07	1.33	1.99	2.83	3.88	9.31	12.99	21.53
	50	0.88	1.13	1.41	2.11	3.01	4.12	9.87	13.30	22.13
	60	0.93	1.19	1.49	2.24	3.19	4.38	10.47	13.57	22.66
	70	0.89	1.25	1.57	2.37	3.38	4.65	11.10	13.81	23.14
	80	1.03	1.32	1.66	2.50	3.58	4.93	11.58	14.02	23.57
	90	1.08	1.90	1.75	2.64	3.79	5.22	11.75	14.21	23.87
	100	1.13	1.46	1.84	2.78	4.00	5.52	11.91	14.38	24.31
DIM	L	3'-4"	3'-7 1/2"	3'-11"	4'-6"	5'-1"	5'-8"	7'-6"	8'-8"	10'-2"
	W	2'-4"	2'-7 1/2"	2'-11"	3'-6"	4'-1"	4'-8"	6'-2"	7'-4"	8'-8"
	H	1'-8"	1'-11 1/4"	2'-2 1/2"	2'-9"	3'-1 1/2"	3'-10"	5'-1"	6'-2"	7'-4"
	D	1'-0"	1'-0"	1'-0"	1'-0"	1'-0"	1'-0"	1'-6"	1'-8"	1'-8"
	T	6"	6"	6"	6"	6"	6"	8"	8"	9"

DIM	L	2'-4"	2'-8"	2'-9"	3'-6"	4'-1"	4'-0"	5'-10"	7'-0"	8'-2"
	H on Earth	1'-6"	1'-6"					2'-0"		
	H on Rock	1'-0"								
VOLUME (CYDS)	On Earth	0.13	0.15	0.16	0.19	0.23	0.26	0.43	0.52	0.61
	On Rock	0.09	0.1	0.1	0.13	0.15	0.17	0.22	0.26	0.31

NOTES:

1. CIRCULAR PIPE INCLUDES SLIGHTLY ELLIPTICAL CONCRETE PIPE WITH CIRCULAR REINFORCEMENT.
2. VOLUME DISPLACED BY BARREL OF PIPE HAS BEEN COMPUTED USING INSIDE DIAMETER DIMENSIONS OF PIPE.
3. FOR GRADE BREAKS IN PIPE, USE AVERAGE GRADE TO CALCULATE VOLUMES.

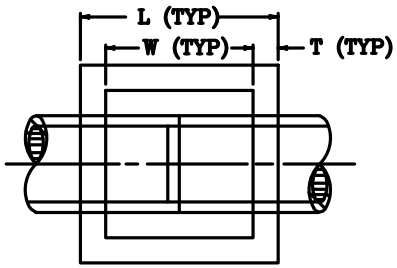

PLAN VIEW

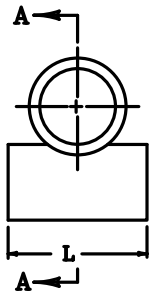

END ELEVATION

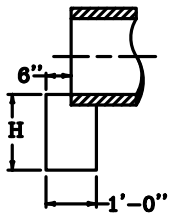

SECTION A–A

END ANCHOR FOR PIPE OUTLET

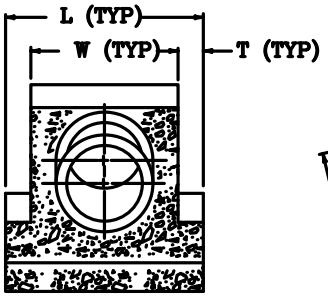

SECTION X–X

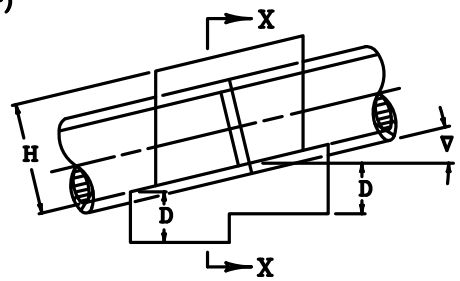

ELEVATION VIEW

INTERMEDIATE ANCHOR

INTERMEDIATE AND END CULVERT ANCHOR (AML 23-40-2)

KY DAML 1–2013

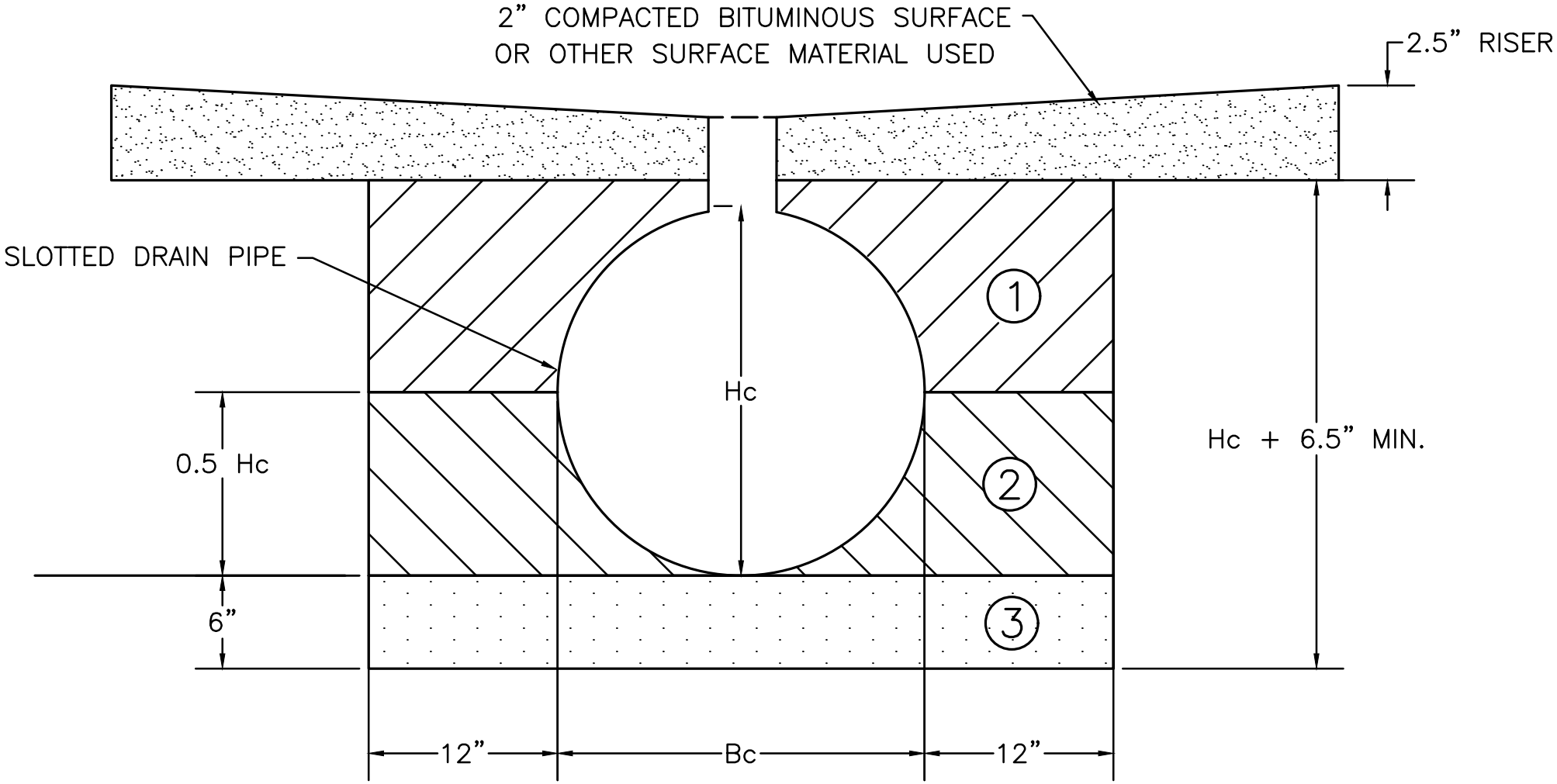

1. 85% COMPACTED DGA IN LAYERS 6" OR LESS TO WIDTH AND ELEVATION AS SHOWN W/ MECHANICAL TAMPERS OR COMPACTORS.
2. 95% COMPACTED DGA IN LAYERS 6" OR LESS W/ MECHANICAL TAMPERS OR COMPACTORS.
3. UNCOMPACTED DGA TO WIDTH AND ELEVATION SHOWN.
4. FLOWABLE FILL SHALL BE USED ON ALL PAVED ROADS. HDPE PIPE MUST BE ANCHORED WITH GUY WIRE ANCHORS AND STRAPS OR EQUIVALENT PRIOR TO PLACING FLOWABLE FILL.

SLOTTED PIPE BEDDING (AML 23-50-1)

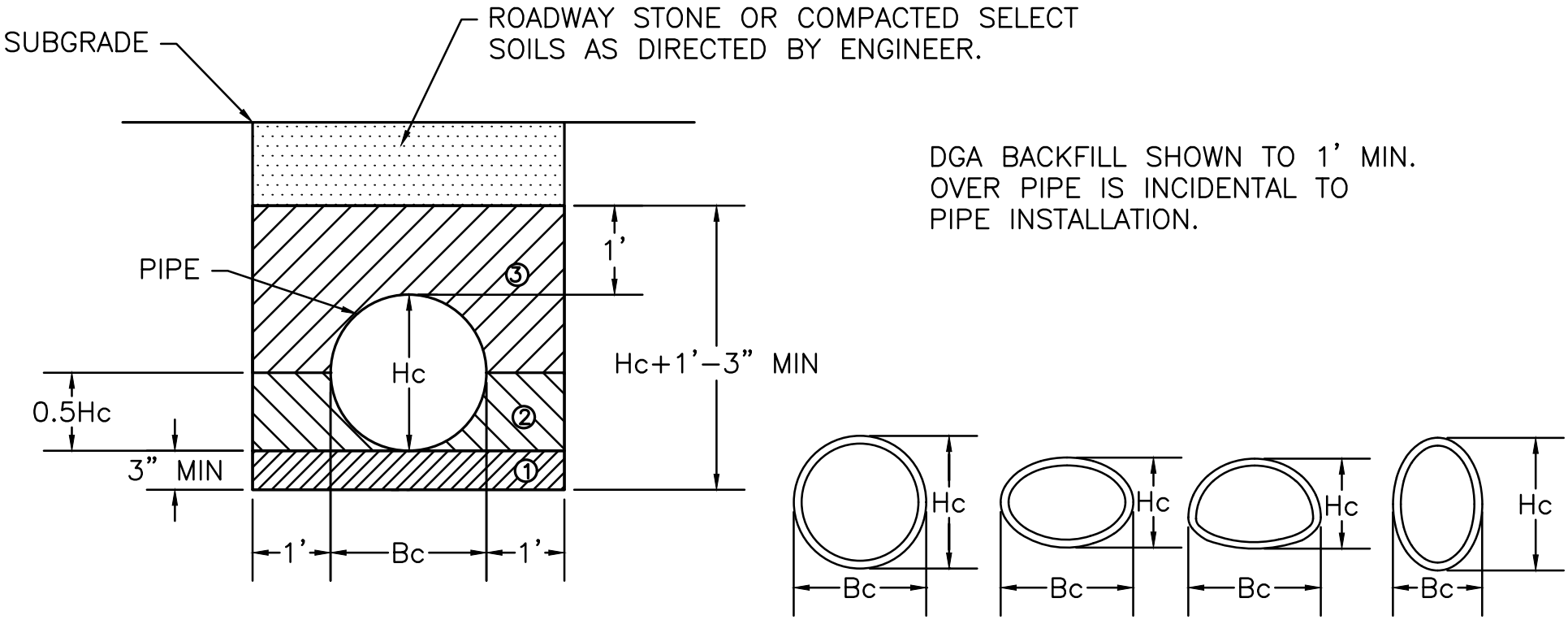

DGA BACKFILL SHOWN TO 1' MIN. OVER PIPE IS INCIDENTAL TO PIPE INSTALLATION.

1. UNCOMPACTED DENSE GRADE AGGREGATE (DGA) TO WIDTH AND ELEVATION SHOWN
2. 95% COMPACTED DGA IN LAYERS 6" OR LESS TO WIDTH AND ELEVATION AS SHOWN W/ MECHANICAL TAMPERS OR COMPACTORS
3. 85% COMPACTED DGA IN LAYERS 6" OR LESS TO WIDTH AND ELEVATION AS SHOWN W/ MECHANICAL TAMPERS OR COMPACTORS
4. ANCHORED HDPE & RHDPE WITH GUY WIRE ANCHORS AND STRAPS OR EQUIVALENT IF FLOWABLE WILL IS USED INSTEAD OF DGA. ANCHOR PRIOR TO PLACING FLOWABLE FILL.
5. USE FLOWABLE FILL ALL PAVED ROADS WITH REINFORCED CONCRETE PIPE (SEE DETAIL 50–10–4).

PIPE BEDDING (23-50-2)

BLANK

PIPE TYPES:

CMP: CORRUGATED STEEL PIPE WITH HELICAL LOCK SEAM OR HELICAL WELDED SEAM (KYTC DEPT OF HIGHWAY'S "CSPHS")

PVC: POLYVINYL CHLORIDE

HDPE: HIGH DENSITY POLYETHYLENE PIPE (SMOOTH INTERIOR, CORRUGATED OUTER WALL)

RCP: CIRCULAR REINFORCED CONCRETE PIPE

FF: FLOWABLE FILL REQUIRED

CMP ARCH: CORRUGATED STEEL PIPE ARCH (ANNULAR CORR).

RCHEP: REINFORCED CONCRETE HORIZONTAL ELLIPTICAL PIPE (NON-CIRCULAR)

NOTES:

1. GAGES FOR CORRUGATED STEEL PIPE ITEMS SHOWN ARE BASED ON ALUMINUM-COATED TYPE 2 STEEL AS PER AASHTO M-274. ALUMINUM COATED TYPE 2 STEEL IS ONLY PERMITTED IN pH RAGES OF 5-9.

2. MAXIMUM COVER HEIGHT MEASURED FROM TOP OF PIPE TO SUBGRADE ELEVATION SHALL GOVERN GAGE OF PIPE TO BE USED FOR ENTIRE LENGTH OF PIPE INSTALLATION.

3. ALL CIRCULAR STRUCTURAL PLATE SHALL BE 5% VERTICALLY ELONGATED.

4. FILL DEPTHS OVER 60' ARE TO BE SPECIALLY DESIGNED.

5. $2\frac{2}{3}$" X $\frac{1}{2}$" CMP MEANS $2\frac{2}{3}$" SPACING CENTERS OF CORRUGATIONS AND $\frac{1}{2}$" MIN DEPTH OF CORRUGATION.

PIPES COVER DEPTHS CHART KEY & NOTES (AML 23-50-4)

Pipe Dia.	Pipe Type	CIRCULAR PIPE COVER HEIGHT IN FEET											
		2-5	5-10	10-15	15-20	20-25	25-30	30-35	35-40	40-45	45-50	50-55	55-60
12" & 15"	2 2/3"x 1/2"CMP	16 GA.											
	PVC	SMOOTH WALL (SOLID WALL)											
	HDPE	SMOOTH INTERIOR				FF							
	RCP	CLASS III					SPECIAL DESIGN						
18"	2 2/3"x 1/2"CMP	16 GA.											
	PVC	RIBBED (PROFILE WALL)											
	HDPE	SMOOTH INTERIOR				FF							
	RCP	CLASS III					SPECIAL DESIGN						
24"	2 2/3"x 1/2"CMP	16 GA.											14 GA.
	PVC	RIBBED (PROFILE WALL)											
	HDPE	SMOOTH INTERIOR				FF							
	RCP	CLASS III					SPECIAL DESIGN						
30"	2 2/3"x 1/2"CMP	16 GA.								14 GA.			12 GA.
	PVC	RIBBED (PROFILE WALL)											
	HDPE	SMOOTH INTERIOR				FF							
	RCP	CLASS III					SPECIAL DESIGN						
36"	2 2/3"x 1/2"CMP	14 GA.									12 GA.		
	PVC	RIBBED (PROFILE WALL)											
	HDPE	SMOOTH INTERIOR				FF							
	RCP	CLASS III					SPECIAL DESIGN						
48"	2 2/3"x 1/2"CMP	14 GA.							12 GA.		10 GA.		
	PVC	RIBBED (PROFILE WALL)											
	HDPE	SMOOTH INT.											
	RCP	CLASS III					SPECIAL DESIGN						
60"	2 2/3"x 1/2"CMP	12 GA.							10 GA.				
	3" X 1"CMP	14 GA.						12 GA.		10 GA.			
	5" X 1"CMP	14 GA.					12 GA.			10 GA.			
	RCP	CLASS III					SPECIAL DESIGN						
72"	2 2/3"x 1/2"CMP	10 GA.											
	3" X 1"CMP	14 GA.					12 GA.		10 GA.				
	5" X 1"CMP	14 GA.				12 GA.		10 GA.					
	RCP	CLASS III					SPECIAL DESIGN						
		2-5	5-10	10-15	15-20	20-25	25-30	30-35	35-40	40-45	45-50	50-55	55-60

SEE AML 23-50-4 FOR
CHART KEY & NOTES

CIRCULAR PIPE COVER DEPTHS (AML 23-50-5)

NON-CIRCULAR PIPE COVER HEIGHT IN FEET

EQUI. PIPE DIA.	Pipe Type	2-5	6	7	8	9	10
15"	2 2/3" X 1/2 " CSPA	16 GA.					
18"	2 2/3" X 1/2 " CSPA	16 GA.					
	RCHEP	CLASS III					
24"	2 2/3" X 1/2 " CSPA	16 GA.					
	RCHEP	CLASS III					
30"	2 2/3" X 1/2 " CSPA	16 GA.					
	RCHEP	CLASS III					
36"	2 2/3" X 1/2 " CSPA	14 GA.					
	RCHEP	CLASS III					
48"	2 2/3" X 1/2 " CSPA	12 GA.					
	RCHEP	CLASS III					
60"	2 2/3" X 1/2 " CSPA	10 GA.					
	3" X 1" CSPA	14 GA.					
	5" X 1" CSPA	14 GA.					
	RCHEP	CLASS III					
72"	3" X 1" CSPA	14 GA.					
	5" X 1" CSPA	14 GA.					
	6" X 2" CSPA	12 GA.					
	3" X 1" CAPA	14 GA.					
	RCHEP	CLASS III					
		2-5	6	7	8	9	10

EQUIVALENT CIRCULAR PIPE DIAMETER	2 2/3" X 1/2" CMP ARCH		RCHEP	
	SPAN (INCH)	RISE (INCH)	SPAN (INCH)	RISE (INCH)
15"	17	13		
18"	21	15	23	14
21"	24	18		
24 "	28	20	30	19
30"	35	24	38	24
36"	42	29	45	29
42"	49	33	53	34
48"	57	38	60	38

SEE AML 23–50–4 FOR CHART KEY & NOTES

NON-CIRCULAR PIPE COVER DEPTHS & EQUIVALENT CIRCULAR PIPE DIAMETERS (AML 23-50-6)

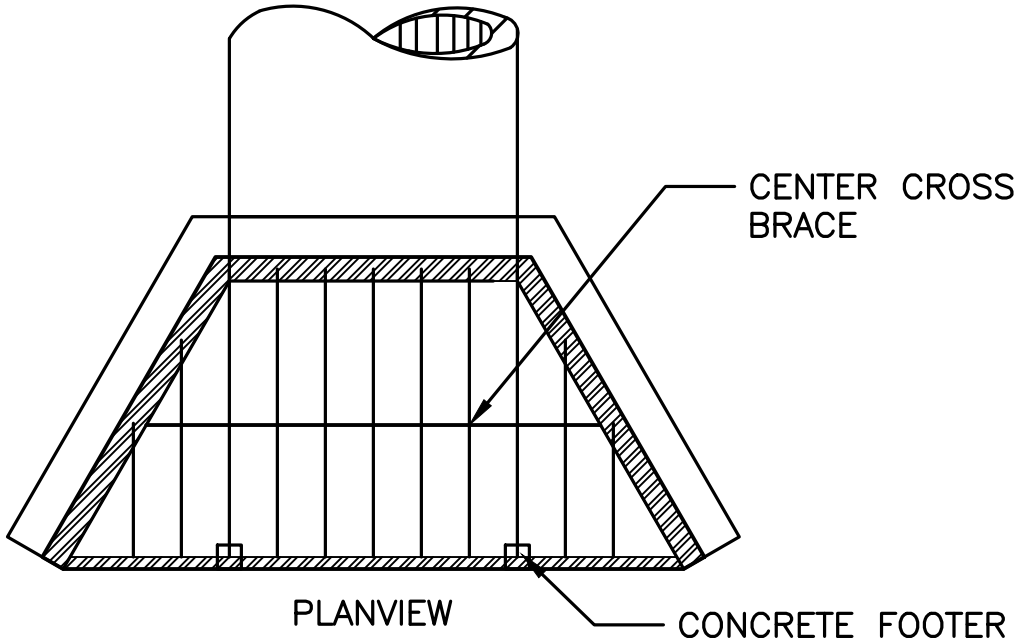

1. DEBRIS RAILS SHOULD BE 1.25" RECTANGULAR STEEL SECTIONS SET ON 6" CENTERS.

2. SET CENTER CROSS BRACE AT ELEVATION AT LEAST ½ PIPE DIA. ABOVE CULVERT INVERT.

3. USE CROSS BARS ONLY ON PIPES >36" UNLESS STATED OTHERWISE ON THE DRAWINGS OR IN THE SPECIAL CONDITIONS OR WHEN DIRECTED BY ENGINEER IN WRITING.

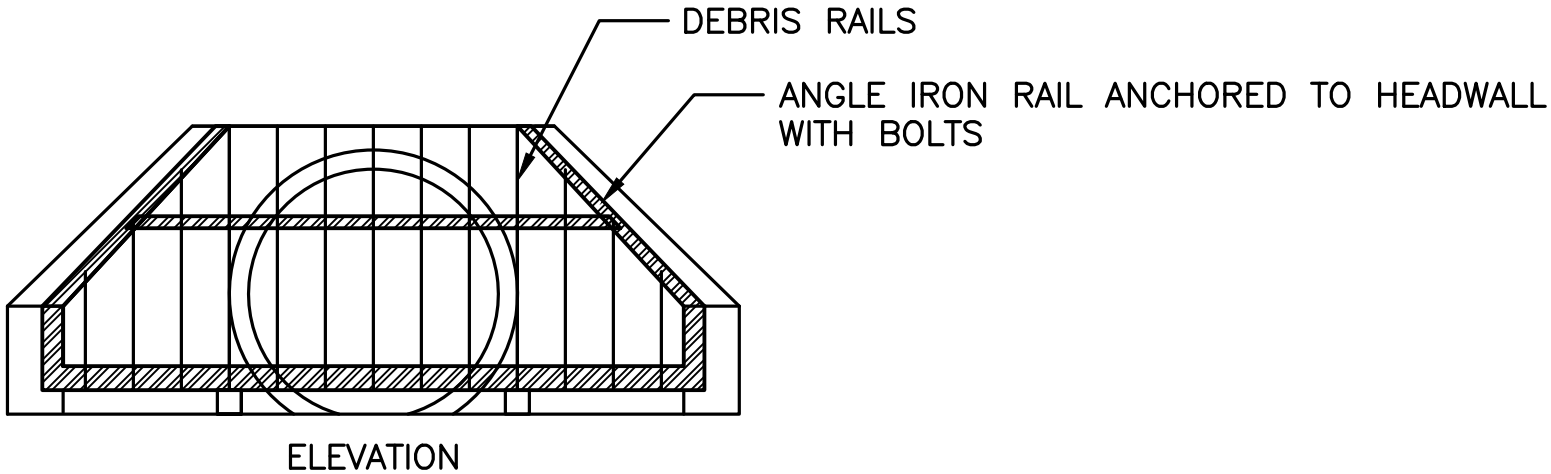

CULVERT DEBRIS BARRIER (AML 23-60-1)

KYDAML 2/2013

"BW" SPACING AND "H" ARE SPECIFIED ON DRAWINGS OR SPECIAL CONDITIONS.

BARRIER SCREEN MATERIALS WILL BE SPECIFIED ON THE DRAWINGS. IF NOT STATED ASSUME #8 REBAR. ALL JOINTS ARE WELDED.

THESE DEVISES SHOULD BE SET UPSTREAM OF THE CULVERT A MINIMUM DISTANCE OF 1.5 TIMES THE PIPE DIAMETER.

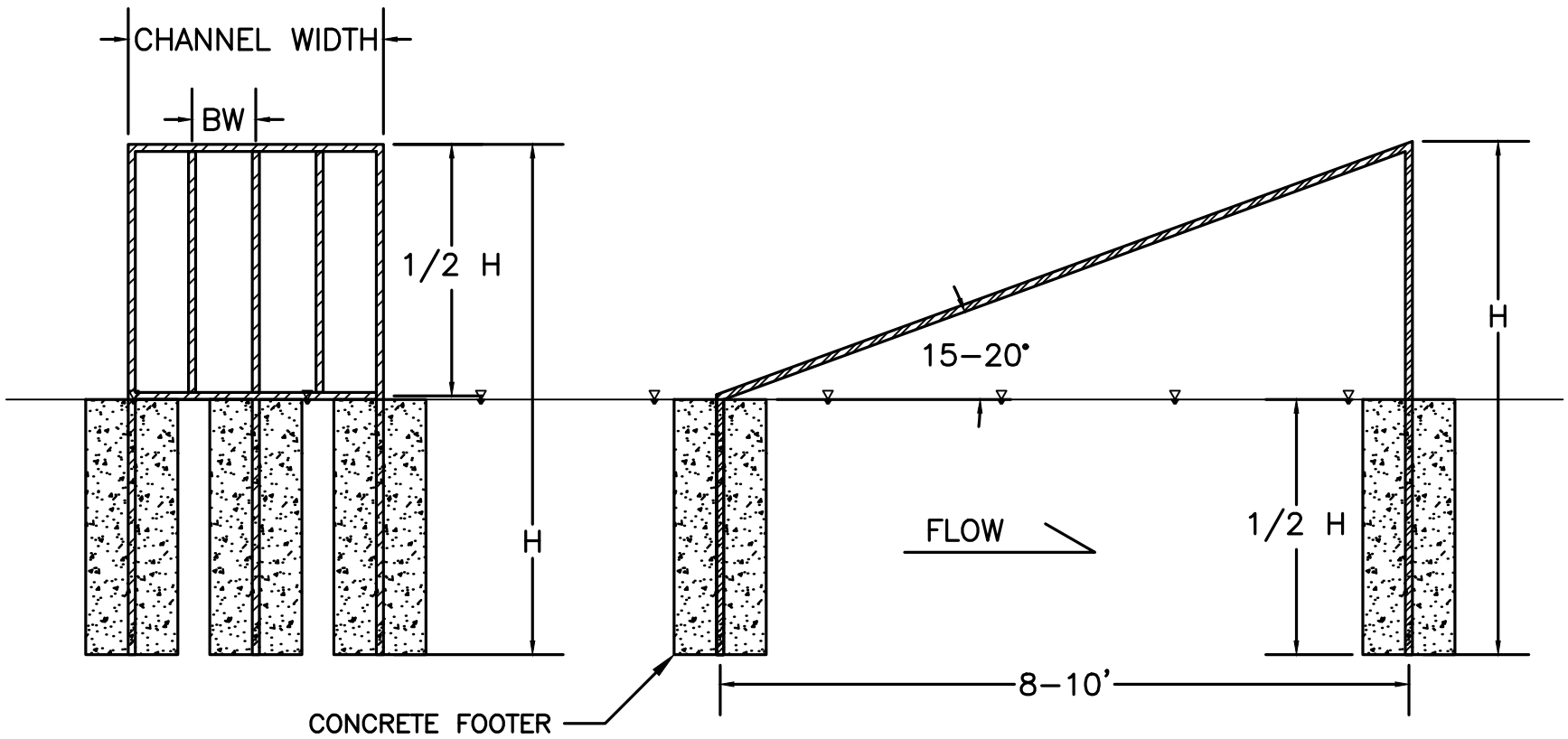

IN-STREAM CULVERT DEBRIS BARRIER (AML 23-60-2)

KYDAML 2/2013

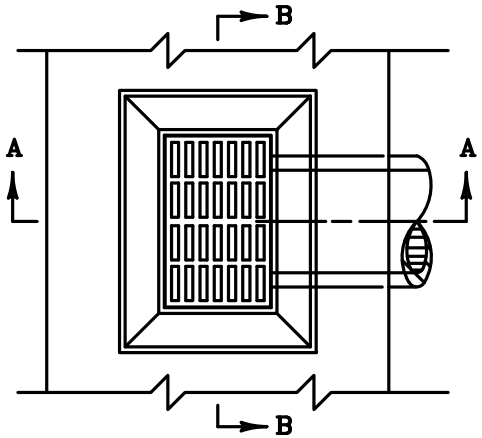

PLAN VIEW

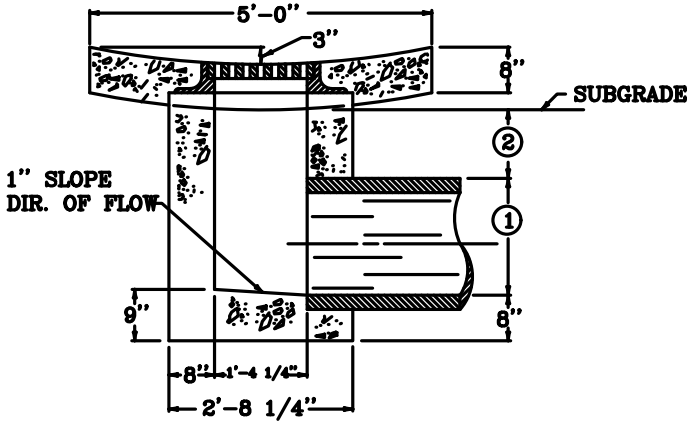

SECTION A-A

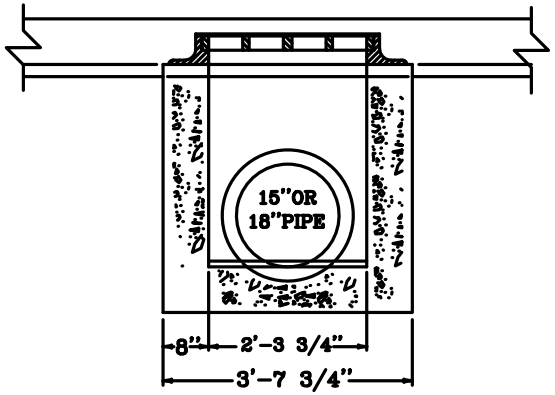

SECTION B-B

NOTES

1. 1'-5 1/4 " FOR 15" PIPE
   1'-8 1/2 " FOR 18" PIPE
2. 1'-0" MINIMUM COVER BELOW SUBGRADE.

APPROX. CONCRETE QUANTITIES

PIPE SIZE	MIN. HEIGHT	CU. YDS. CONC.
15"	3'-4"	0.90
18"	3'-8"	0.97

APPROXIMATE WEIGHTS
FRAME 365 LBS.
GRATE 185 LBS.

NO DEDUCTIONS HAVE BEEN MADE FOR PIPE.

CONCRETE SHALL HAVE 28-DAY STRENGTH OF 4,000 PSI MIN.

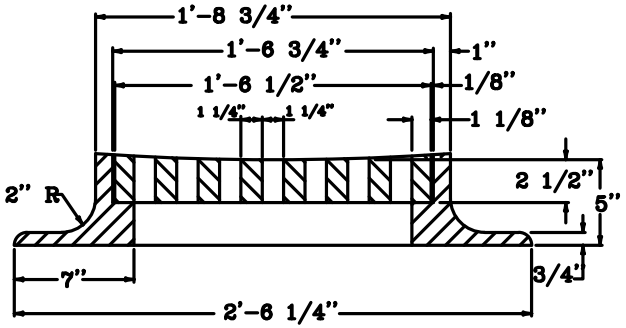

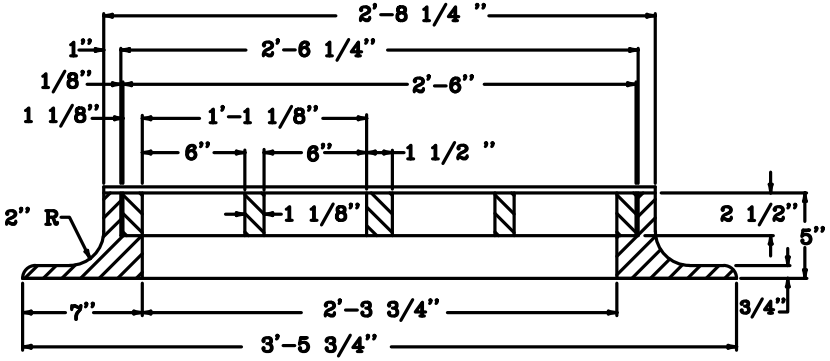

SECTIONAL VIEW OF FRAME AND GRATE

USE WITH AML 24-50-1

DROP BOX - INLET TYPE 1 (AML 24-10-1)

KY DAML 1-2013

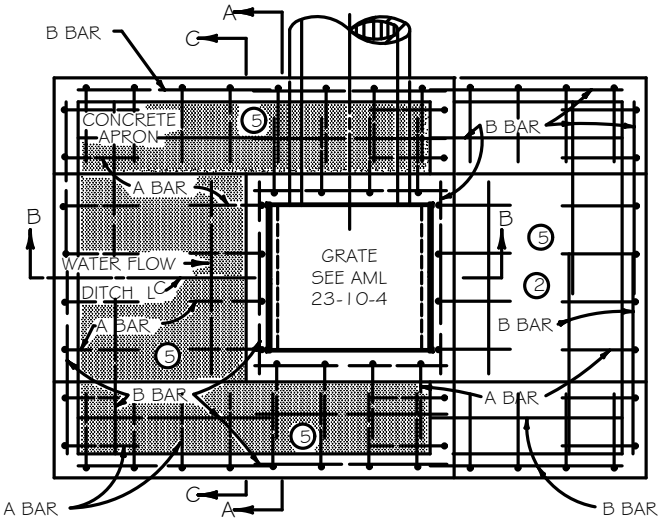

PLAN VIEW

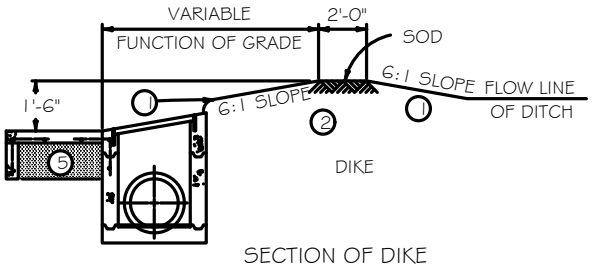

SECTION OF DIKE

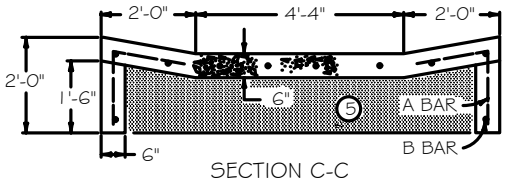

SECTION C-C

BILL OF REINFORCEMENT

BAR	NO. OF BARS	SIZE	LENGTH	APPROX. SPACING
A	40 OR 56	#5	3'-0"	1'-0" C TO C
B	25 OR 40	#4	4'-0"	AS SHOWN

APPROX. QUANTITIES

TYPE	CONCRETE 3'-9" 3 BOX	REINF. STEEL
SAG	4.4 CU. YD. 4	282 LBS
GRADE	3.4 CU. YD. 4	192 LBS

GRATE TYPE 1		
1 GRATE	TOTAL	FRAME
138.5 LBS	277 LBS	51 LBS

GRATE TYPE 2		
1 GRATE	TOTAL	FRAME
132.5 LBS	265 LBS	51 LBS

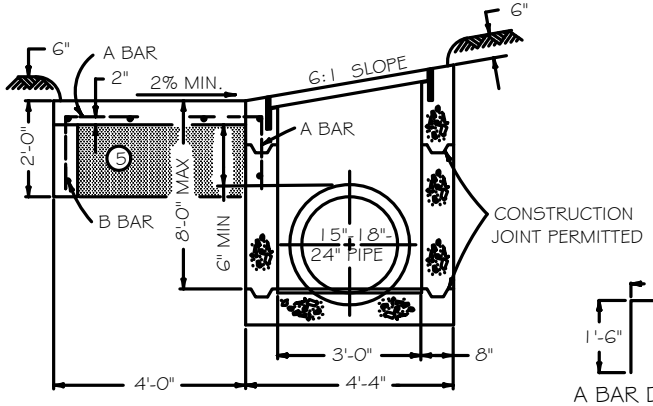

SECTION B-B

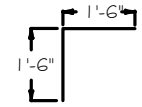

A BAR DETAIL

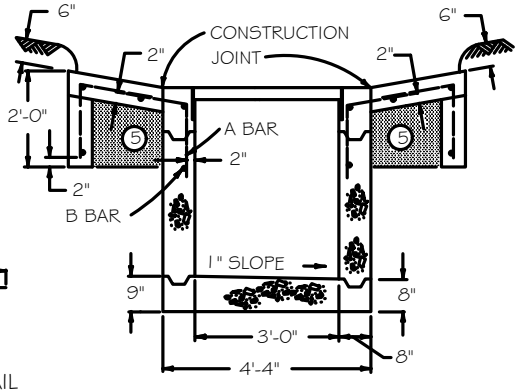

SECTION A-A

CONSTRUCTION REQUIREMENTS:

1. 6:1 SLOPES ARE WITH REFERENCE TO DITCH GRADE.
2. WHEN A BOX INLET IS PLACED IN A SAG, OMIT THE EARTH DIKE AND LONGITUDINAL SLOPE OF THE GRATE AND PROVIDE A CONCRETE APRON ON EACH SIDE OF THE INLET.
3. RATE OF INCREASE OR DECREASE 0.36 CYD PER FOOT IN HEIGHT.
4. DEDUCT APPROXIMATELY 0.1 CYD OF CONCRETE PER PIPE.
5. ▒ COMPACT THIS VOLUME WITH DGA BASE (INCIDENTAL).
6. GRATE TYPE WILL BE SPECIFIED ON THE DRAWINGS AND/OR SPECIAL CONDITIONS. IF NONE IS STATED THEN ASSUME TYPE 1 GRATE IS REQUIRED.

USE WITH AML 24–10–4, 24–50–1

DROP BOX- INLET TYPE 2 (AML 24-10-2)

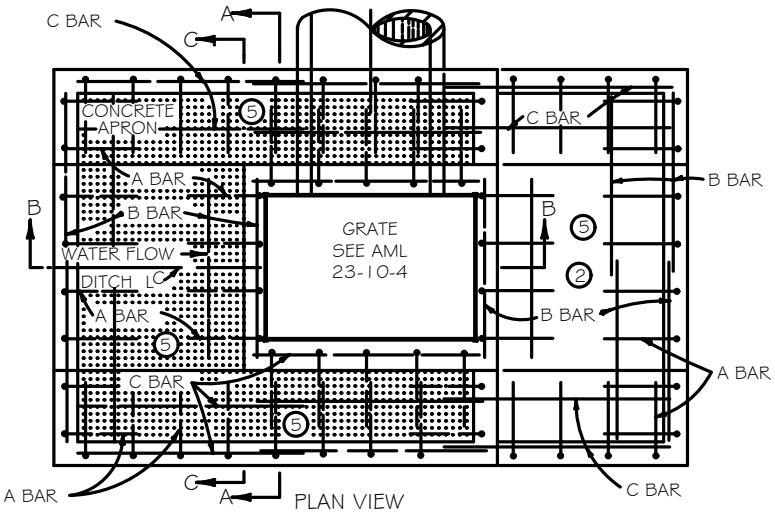

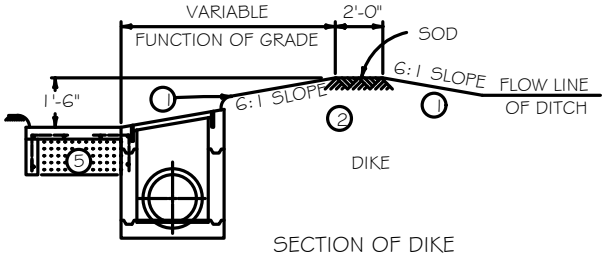

SECTION OF DIKE

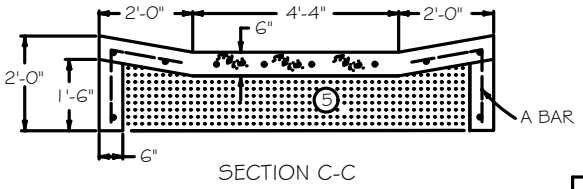

SECTION C-C

BILL OF REINFORCEMENT

BAR	NO. OF BARS	SIZE	LENGTH	APPROX. SPACING
A	44 OR 60	#5	3'-0"	1'-0" C TO C
B	9 OR 18	#4	3'-9"	AS SHOWN
C	16 OR 22	#4	4'-9"	AS SHOWN

APPROX. QUANTITIES

TYPE	CONCRETE 3'-9" 3 BOX	REINF. STEEL
SAG	4.8 CU. YD. 4	303 LBS
GRADE	3.9 CU. YD. 4	212 LBS

GRATE TYPE 1		
1 GRATE	TOTAL	FRAME
176 LBS	352 LBS	58 LBS

GRATE TYPE 2		
1 GRATE	TOTAL	FRAME
170 LBS	340 LBS	58 LBS

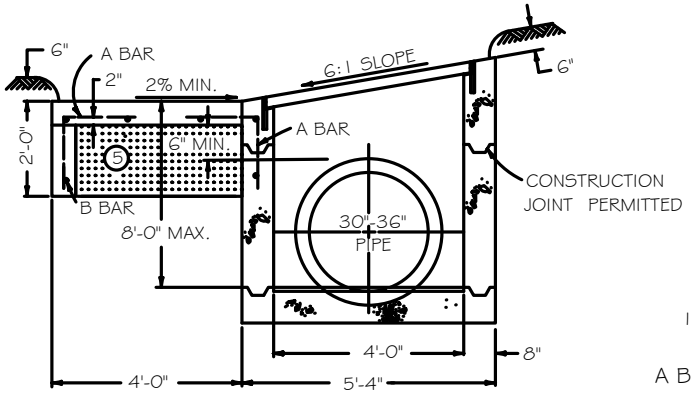

SECTION B-B

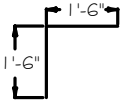

A BAR DETAIL

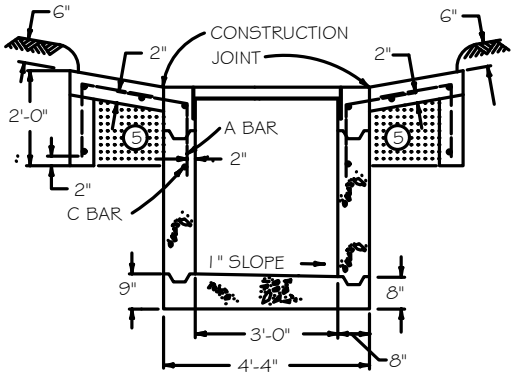

SECTION A-A

CONSTRUCTION REQUIREMENTS:

1. 6:1 SLOPES ARE WITH REFERENCE TO DITCH GRADE.
2. WHEN A BOX INLET IS PLACED IN A SAG, OMIT THE EARTH DIKE AND LONGITUDINAL SLOPE OF THE GRATE AND PROVIDE A CONCRETE APRON ON EACH SIDE OF THE INLET.
3. RATE OF INCREASE OR DECREASE 0.41 CYD PER FOOT IN HEIGHT.
4. DEDUCT APPROXIMATELY 0.2 CYD OF CONCRETE PER 30" PIPE AND 0.3 CYD OF CONCRETE PER 36" PIPE.
5. COMPACT THIS VOLUME WITH DGA BASE (INCIDENTAL).
6. GRATE TYPE WILL BE SPECIFIED ON THE DRAWINGS AND/OR SPECIAL CONDITIONS. IF NONE IS STATED THEN ASSUME TYPE 1 GRATE IS REQUIRED.

USE WITH AML 24–10–4, 24–50–1

DROP BOX- INLET TYPE 3 (AML 24-10-3)

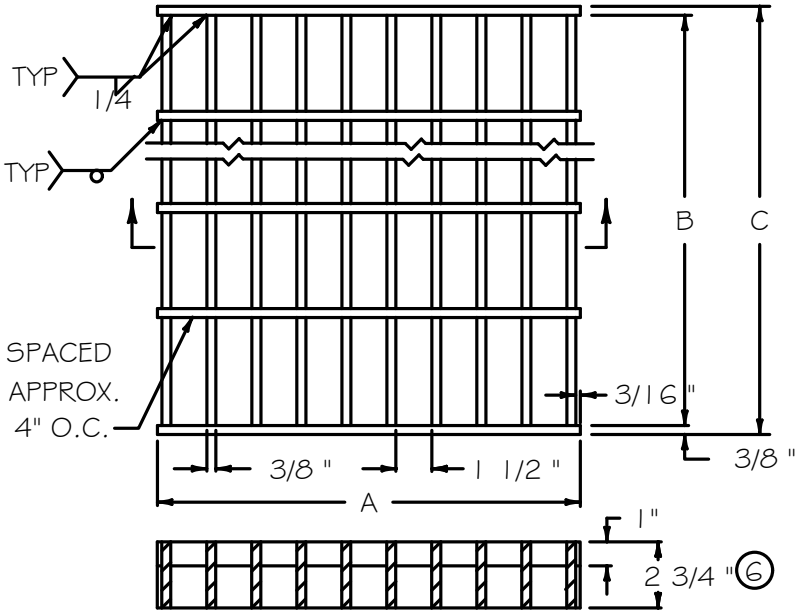

SECTION DETAIL

TYPE 1

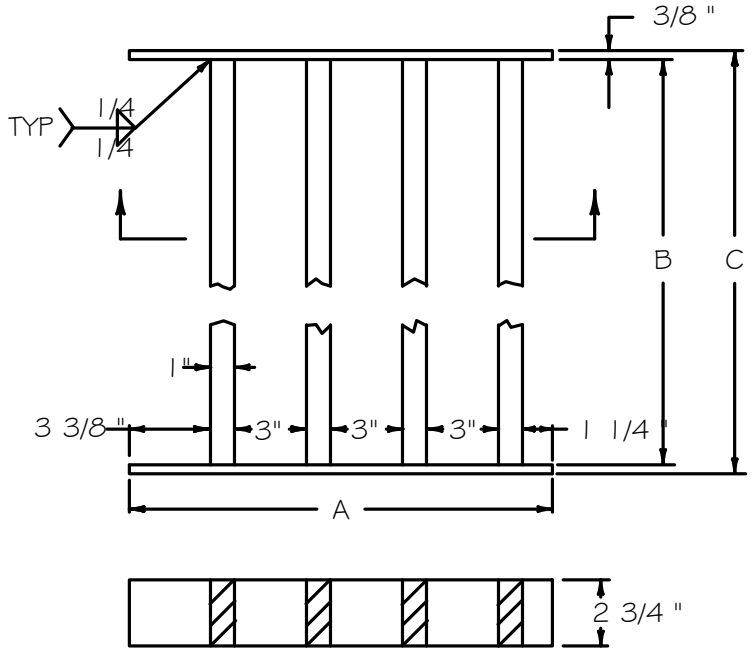

SECTION DETAIL

TYPE 2

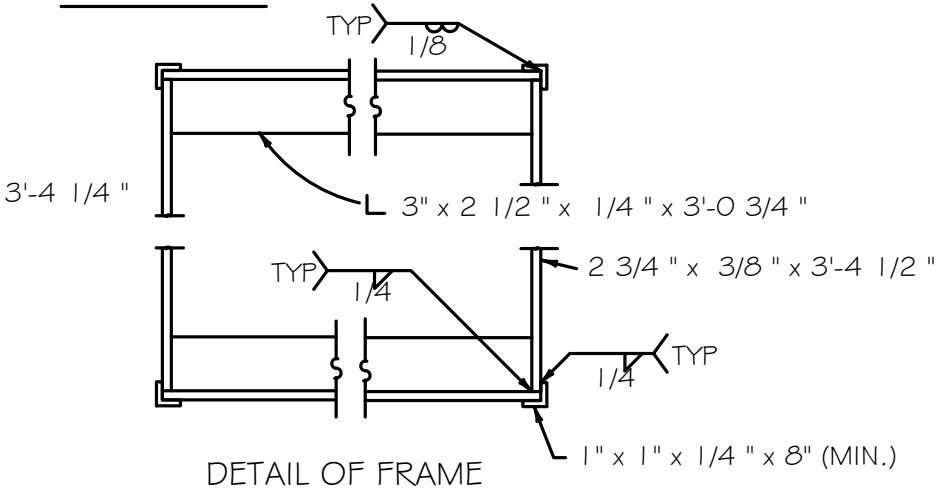

DETAIL OF FRAME

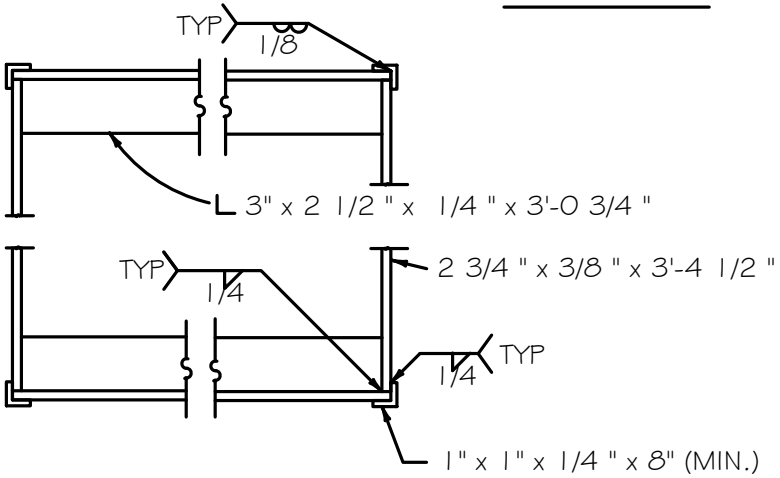

DETAIL OF FRAME

GRATE TYPE 1			
PIPE DIA.	A	B	C
15", 18", 24"	1' - 5 5/8"	3' - 3 1/2"	3' - 4 1/4"
30", 36"	1' - 5 5/8"	4' - 3 1/8"	4' - 4 1/8"

GRATE TYPE 2			
PIPE DIA.	A	B	C
15", 18", 24"	1' - 5 5/8"	3' - 3 1/2"	3' - 4 1/4"
30", 36"	1' - 5 5/8"	4' - 3 1/2"	4' - 4 1/4"

USE WITH AML 24–10–2 & 3

DROP BOX- GRATES FOR INLET TYPE 2 & 3 (AML 24-10-4)

KY DAML 1–2013

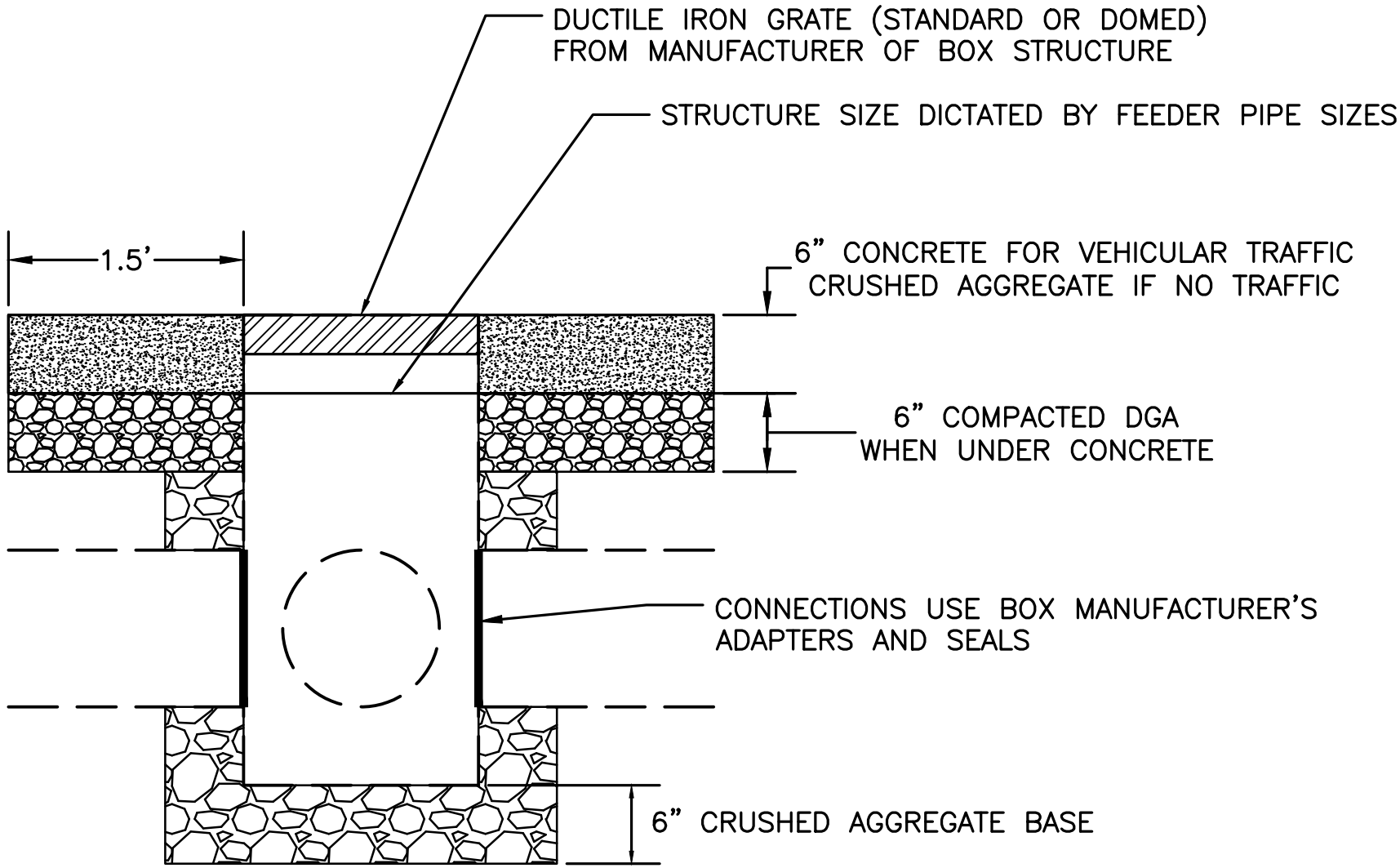

NOTES:

USE A SOLID GRATE TO COVERT INTO A JUNCTION BOX STRUCTURE.

GRATE MUST BE INSTALLED PRIOR TO BRINGING BACKFILL TO WITHIN 2' OF PIPE SURFACE TO PREVENT PIPE DEFLECTION.

PVC PLASTIC BOX STRUCTURES (AML 24-10-5)

KYDAML 12/2014

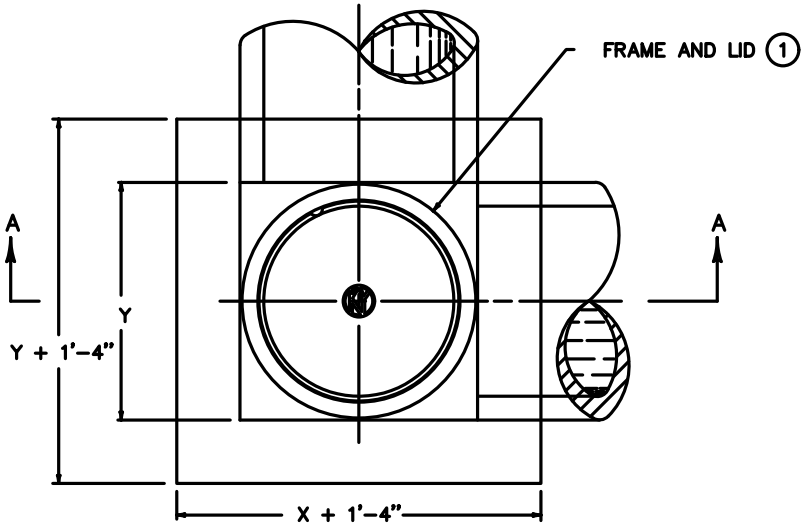

PLAN VIEW

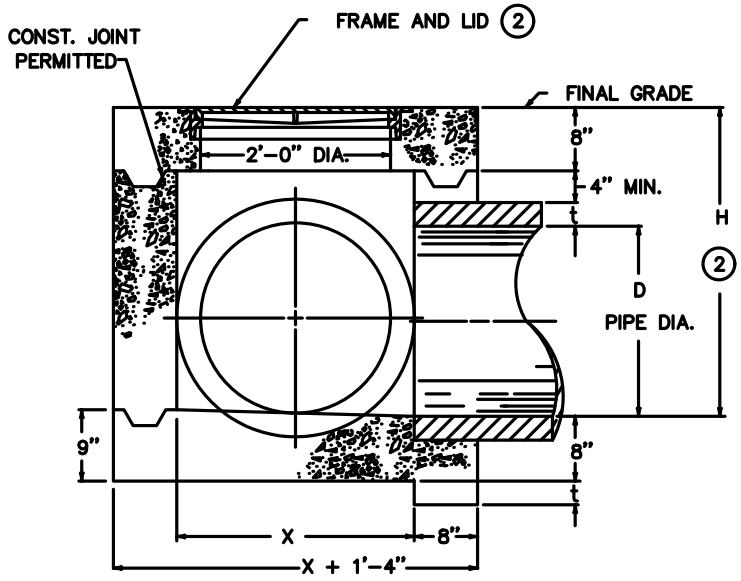

SECTION A–A

NOTES:

1. THE MAXIMUM DEPTH OF BOX FROM FINAL GRADE TO FLOW LINE OF PIPE SHALL BE 8'-0". ANY BOX DEEPER THAN 8'-0" SHALL BE SPECIFICALLY DESIGNED.
2. BASED ON "H" AS EQUAL TO "D + T + 1'-0"
3. Q = CUBIC YARDS OF CONCRETE PER FOOT INCREASE OR DECREASE WHEN "H" VARIES FROM "D + T + 1'-0".
4. NO DEDUCTIONS HAVE BEEN MADE FOR PIPE, SEE REFERENCE CHART FOR QUANTITIES TO DEDUCT.
5. THE DIMENSIONS AND QUANTITIES HAVE BEEN CALCULATED FROM CIRCULAR RCP. WHEN NON-CIRCULAR PIPE IS USED THE BOX SHALL BE DETERMINED BY CONTROLLING DIMENSIONS OF THE PIPE.
6. FOR THIS APPLICATION THE "X" DIMENSION IS ASSUMED TO BE EQUAL TO OR GREATER THAN THE "Y" DIMENSION.
7. CONCRETE- 4,000 PSI; STEEL- 60 KSI

REFERENCE CHART

DIA. OF PIPE	JUNCTION BOX: PIPE ON "X" SIDE OF BOX	JUNCTION BOX: PIPE ON "Y" SIDE OF BOX	CONCRETE TO DEDUCT FOR EACH PIPE: CUBIC YARDS
0	2'-0"	2'-0"	---
12"			0.1
15"–18"			
21"–24"	2'-6"	2'-6"	

DIMENSIONS & ESTIMATE OF QUANTITIES

INLET SIZE NO.	X	Y	PIPE MAX. DIA.	3 H	CONCRETE CUBIC YARDS	4 Q
1	2'-0"	2'-0"	12"	2'-2"	0.91	0.3
2			15"	2'-5"	0.98	
3			18"	2'-9"	1.05	
4	2'-6"		21"	3'-0"	1.27	
5		2'-6"			1.43	
6		2'-0"	24"	3'-3"	1.36	
7		2'-6"			1.52	

USE WITH AML 24–20–3 & 24–50–1

JUNCTION BOX - FRAME AND ACCESSIBLE LID (AML 24-20-1)

KY DAML 1–2013

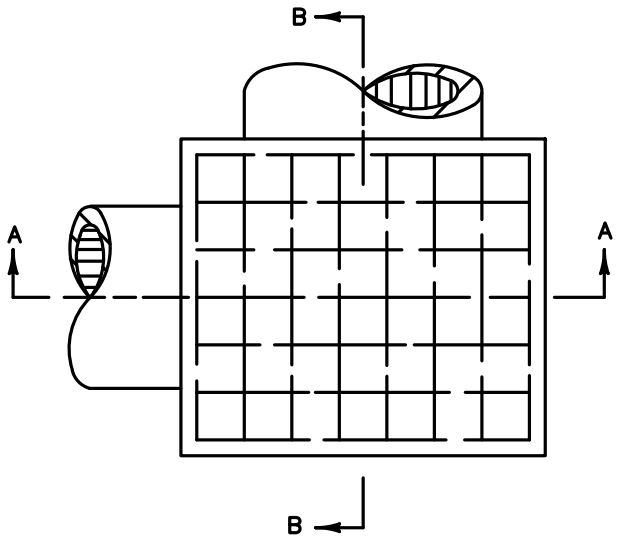

PLAN VIEW

NOTES:

1. H = D + T + 1'-0" FOR THE LARGEST PIPE INVOLVED.
2. STEEL REINFORCEMENT SHALL BE #4 BARS PLACED ON 6" CENTERS.
3. THE MAXIMUM DEPTH OF BOX FROM FINAL GRADE TO FLOW LINE OF PIPE SHALL BE 8'-0". ANY BOX DEEPER THAN THIS SHALL BE SPECIFICALLY DESIGNED.
4. SEE AML 23-20-3 FOR DIMENSIONS AND QUANTITIES.
5. FOR THIS APPLICATION THE "X" DIMENSION IS ASSUMED TO BE EQUAL TO OR GREATER THAN THE "Y" DIMENSION.
6. THE TOP SHALL BE PRECAST.
7. CONCRETE- 4,000 PSI; STEEL- 60 KSI

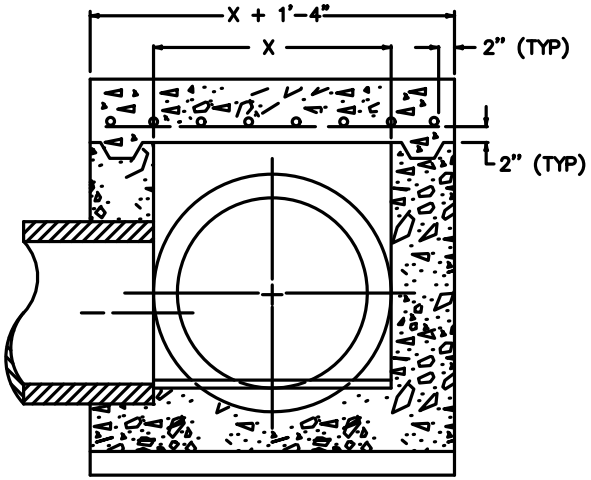

SECTION A-A

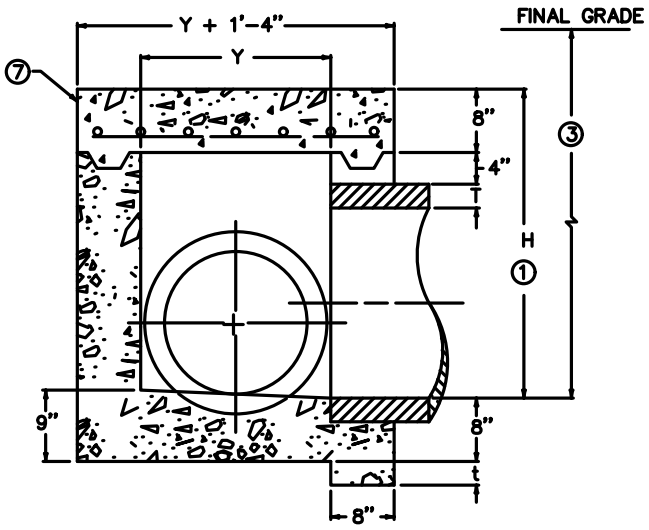

SECTION B-B

USE WITH AML 24-20-3 & 24-50-1

JUNCTION BOX- CONCRETE TOP (AML 24-20-2)

KY DAML 1-2013

DIMENSIONS AND ESTIMATE OF QUANTITIES

INLET SIZE			PIPE	①	CONCRETE		REINF. STEEL
NO.	X	Y	MAX. DIA.	H	CUBIC YARDS	② Q	LBS.
1	2'–0"	2'–0"	12"	2'–2"	0.99	0.3	28
2			15"	2'–5"	1.06		
3			18"	2'–9"	1.13		
4	2'–6"		21"	3'–0"	1.35		32
5		2'–6"			1.51		37
6		2'–0"	24"	3'–3"	1.44		32
7		2'–6"			1.60		37
8	3'–0"	2'–0"	27"	3'–6"	1.68		
9		2'–6"			1.86		42
10		3'–0"			2.04	0.4	48
11	3'–6"	2'–0"	30"	3'–10"	1.93	0.3	41
12		2'–6"			2.13	0.4	47
13		3'–0"			2.34		54
14		3'–6"			2.54		60
15		2'–0"	33"	4'–1"	2.02	0.3	41
16		2'–6"			2.24	0.4	47
17		3'–0"			2.45		54
18		3'–6"			2.66		60
19	4'–0"	2'–0"	36"	4'–4"	2.30		45
20		2'–6"			2.53		52
21		3'–0"			2.76		59
22		3'–6"			2.99		66
23		4'–0"			3.22	0.5	73
24	4'–6"	2'–0"	42"	4'–11"	2.70	0.4	50
25		2'–6"			2.95		57
26		3'–0"			3.21		65
27		3'–6"			3.47	0.5	73
28		4'–0"			3.73		80
29		4'–6"			3.98		88
30	5'–0"	2'–0"	48"	5'–5"	3.12	0.4	54
31		2'–6"			3.41		62
32		3'–0"			3.69	0.5	71
33		3'–6"			3.97		79
34		4'–0"			4.26		88
35		4'–6"			4.54		96
36		5'–0"			4.83	0.6	104
37	5'–6"	2'–0"	54"	6'–0"	3.58	0.4	58
38		2'–6"			3.89	0.5	67
39		3'–0"			4.20		76
40		3'–6"			4.51		86
41		4'–0"			4.82		95
42		4'–6"			5.13	0.6	104
43		5'–0"			5.44		113
44		5'–6"			5.75		122
45	6'–0"	2'–0"	60"	6'–6"	4.06	0.5	63
46		2'–6"			4.39		72
47		3'–0"			4.73		82
48		3'–6"			5.07		92

INLET SIZE			PIPE	①	CONCRETE		REINF. STEEL
NO.	X	Y	MAX. DIA.	H	CUBIC YARDS	② Q	LBS.
49	6'–0"	4'–0"	60"	6'–6"	5.40	0.6	102
50		4'–6"			5.74		111
51		5'–0"			6.08		121
52		5'–6"			6.42		131
53		6'–0"			6.75	0.7	140
54	7'–0"	2'–0"	66"	7'–1"	4.81	0.5	71
55		2'–6"			5.19		83
56		3'–0"			5.57	0.6	94
57		3'–6"			5.94		105
58		4'–0"			6.32		116
59		4'–6"			6.70		127
60		5'–0"			7.07	0.7	138
61		5'–6"			7.45		149
62		6'–0"			7.83		160
63		7'–0"			8.58	0.8	182
64	7'–6"	2'–0"	72"	7'–7"	5.37	0.5	76
65		2'–6"			5.77	0.6	88
66		3'–0"			6.17		99
67		3'–6"			6.57		111
68		4'–0"			6.98		123
69		4'–6"			7.38	0.7	134
70		5'–0"			7.78		146
71		5'–6"			8.19		158
72		6'–0"			8.59		169
73		7'–0"			9.39	0.8	193
74		7'–6"			9.80		204

REFERENCE CHART

DIA. OF PIPE	JUNCTION BOX		CONCRETE TO DEDUCT FOR EACH PIPE
	PIPE ON "X" SIDE OF BOX	PIPE ON "Y" SIDE OF BOX	CUBIC YARDS
12"	2'–0"	2'–0"	0.1
15"–18"			
24"	2'–6"	2'–6"	
27"	3'–0"	3'–0"	0.2
33"	3'–6"	3'–6"	
36"	4'–0"	4'–0"	0.3
48"	5'–0"	5'–0"	0.5
60"	6'–0"	6'–0"	0.7
72"	7'–6"	7'–6"	1.0

NOTES:

1. BASED ON H AS EQUAL TO D+T+1'–0".
2. Q = CUBIC YARDS OF CONCRETE PER FOOT INCREASE OR DECREASE WHEN "H" VARIES FROM D+T+1'–0".
3. NO DEDUCTIONS HAVE BEEN MADE FROM PIPE, SEE REFERENCE CHART FOR QUANTITIES TO DEDUCT.
4. THE DIMENSIONS AND QUANTITIES HAVE BEEN CALCULATED FOR CIRCULAR RCP. WHEN NON-CIRCULAR PIPE IS USED THE BOX SIZE SHALL BE DETERMINED BY THE CONTROLLING DIMENSIONS OF THE PIPE.

USE WITH AML 24–20–1 & 2

JUNCTION BOX DIMENSIONS (AML 24-20-3)

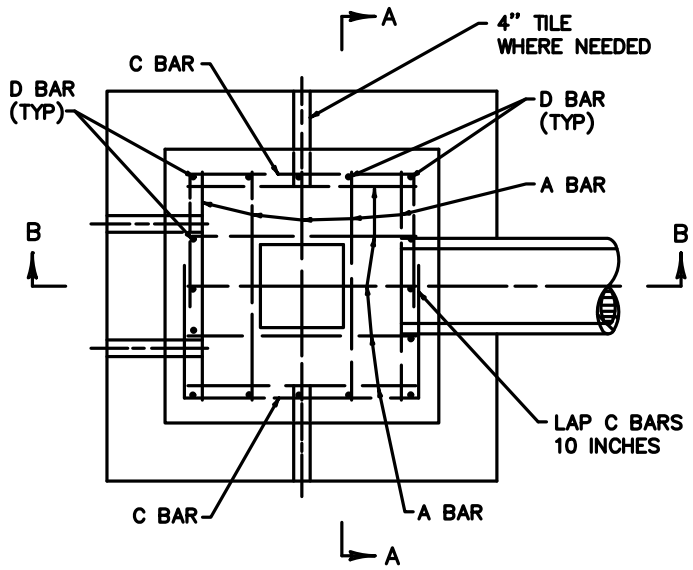

PLAN VIEW

NOTES

LOCATION OF OPENING MAY BE DETERMINED IN THE FIELD FOR A SIDE OR BOTTOM SPRING INLET.

SPRING INLET TYPE "A" SHALL BE USED WHEN FILL OVER TOP IS 10' OR MORE.

STEEL REINFORCEMENT

NO. 4 STEEL BARS			TOTAL LBS.
BAR	QTY.	LIN. FT.	
A	10	4'-7"	105
C	6	9'-9"	
D	16	3'-4"	

CLASS "A" CONCRETE

PIPE DIA.	CU. YDS. CONCRETE
12"	4.61
15"	4.59
18"	4.58

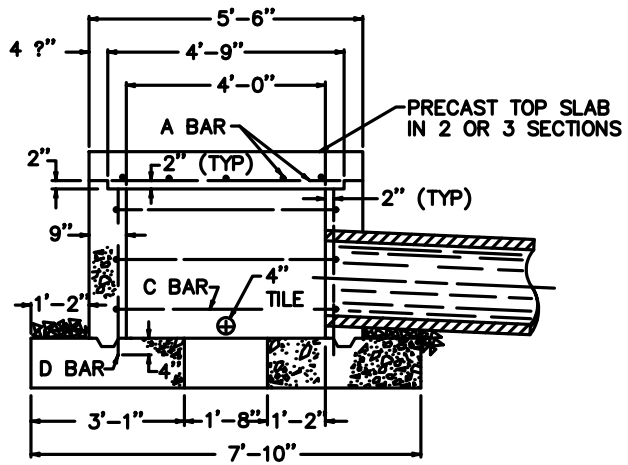

SECTION B-B

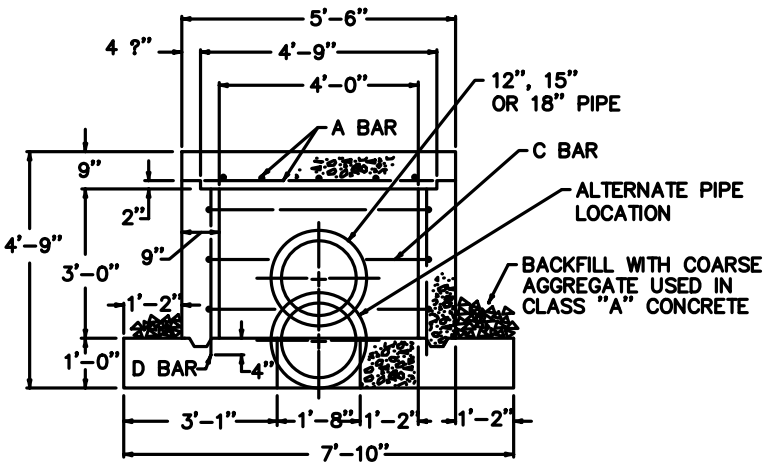

SECTION A-A

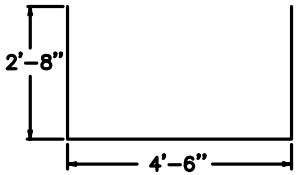

C BAR DETAIL

SPRING BOX- INLET TYPE A (AML 24-30-1)

KY DAML 1-2013

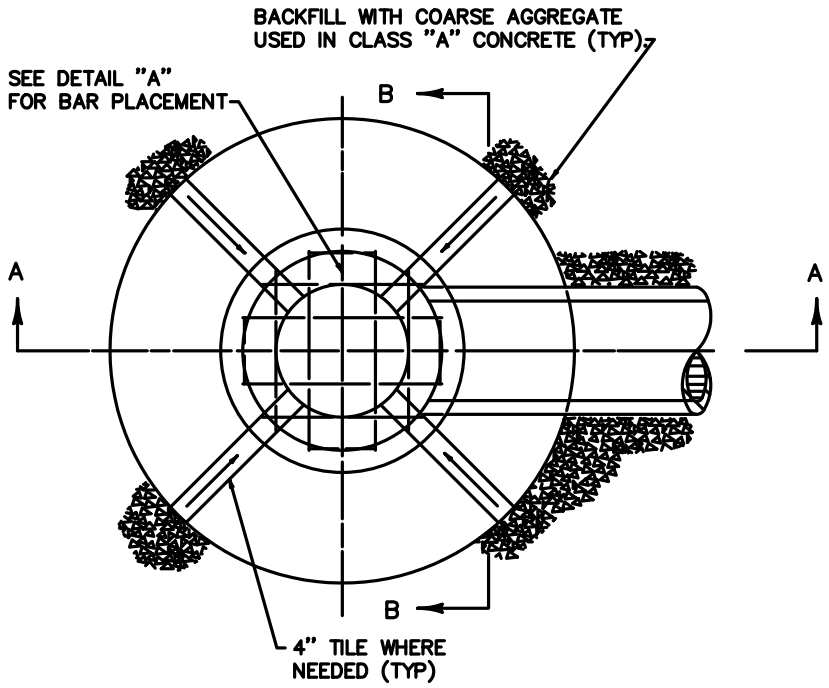

PLAN VIEW

NOTES

1. 12", 15", OR 18" DIAMETER PIPE OUTLET (SEE PIPE SECTIONS FOR SIZE AND TYPE) MORTAR AROUND PIPE TO PREVENT SEEPAGE.
2. SPRING BOX INLET TYPE "B" MAY BE USED WHEN FILL OVER TOP IS LESS THAN 10'–0".
3. STEEL REINFORCEMENT PLACED 6" ON CENTERS.
4. "t" IS CONCRETE PIPE WALL THICKNESS OR METAL PIPE CORRUGATION DEPTH.

STEEL REINFORCEMENT
FOR CONCRETE COVER

NO. 3 STEEL BARS			TOTAL LBS.
BAR	QTY.	LGTH.	
A	4	1'–0"	13
B	4	2'–5"	
C	4	3'–0"	
D	2	3'–2"	

CLASS "A" CONCRETE

PIPE DIA.	CU. YD. CONCRETE
12"	1.54
15"	
18"	

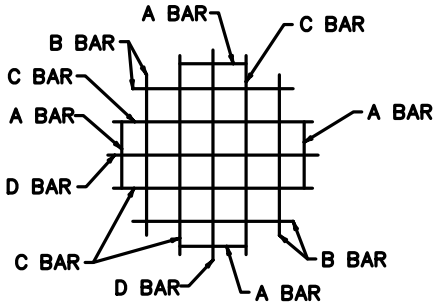

DETAIL "A"

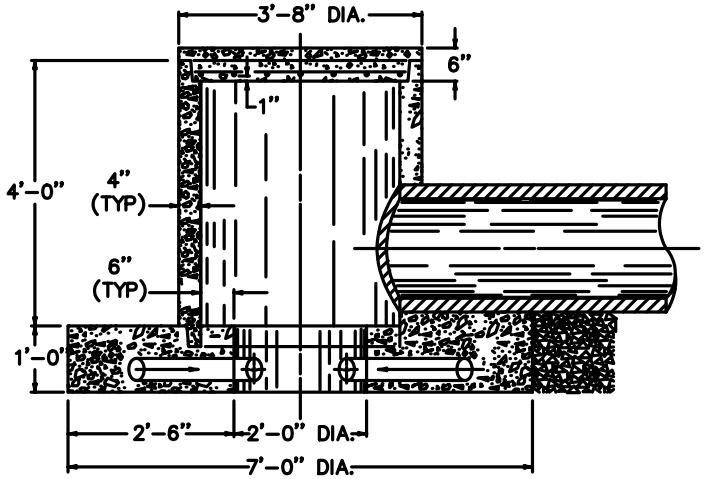

SECTION A–A

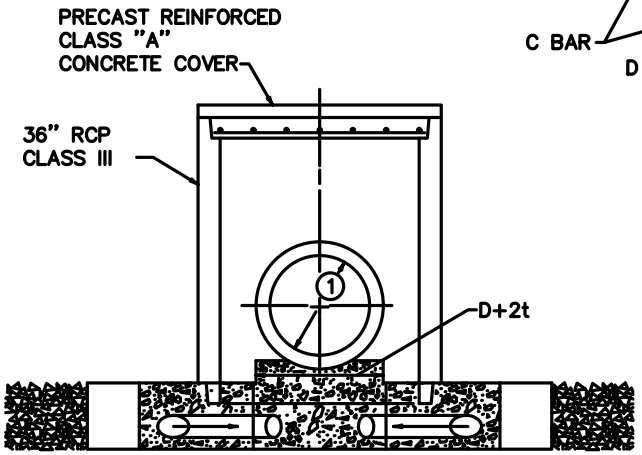

SECTION B–B

SPRING BOX- INLET TYPE B (AML 24-30-2)

KY DAML 1–2013

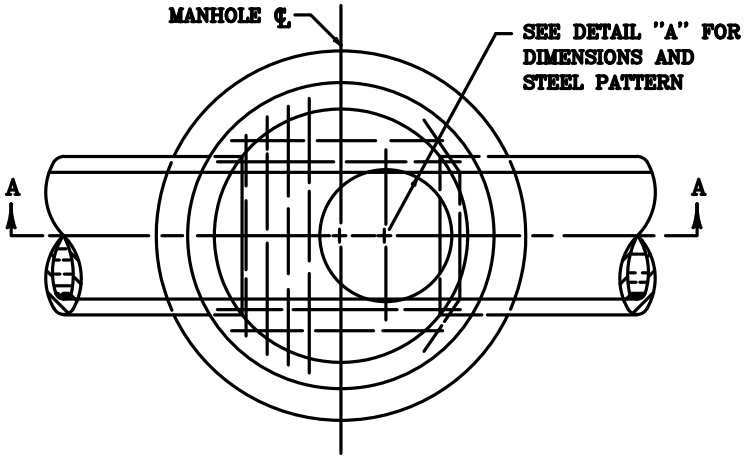

PLAN VIEW

NOTES

1. THE RISER SECTION MAY BE PRECAST CONCRETE PIPE OR CAST–IN–PLACE CONCRETE. A CONCENTRIC CAST–IN–PLACE CONE OR PRECAST CONCRETE CONE MAY BE PERMITTED, PROVIDED HEIGHT LIMITATIONS WOULD PERMIT.
2. THE MAXIMUM SIZE OF INTERCEPTED PIPE SHALL BE 27".
3. COVER OVER HIGHEST PIPE SHALL BE 2'
4. CAST–IN–PLACE CONCRETE MANHOLES SHALL HAVE 8" THICK WALLS.
5. SEE AML 24–40–2 FOR STEP DETAILS.
6. CONCRETE– 4,000 PSI; STEEL– 60 KSI

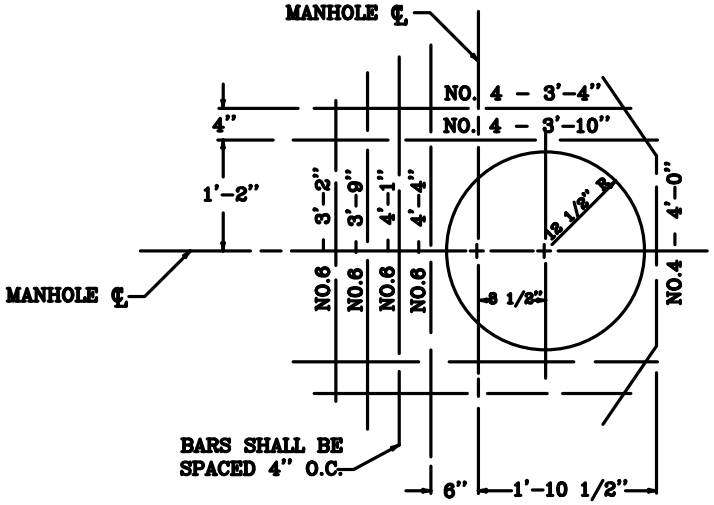

DETAIL "A"
DIMENSIONS AND
STEEL PATTERN

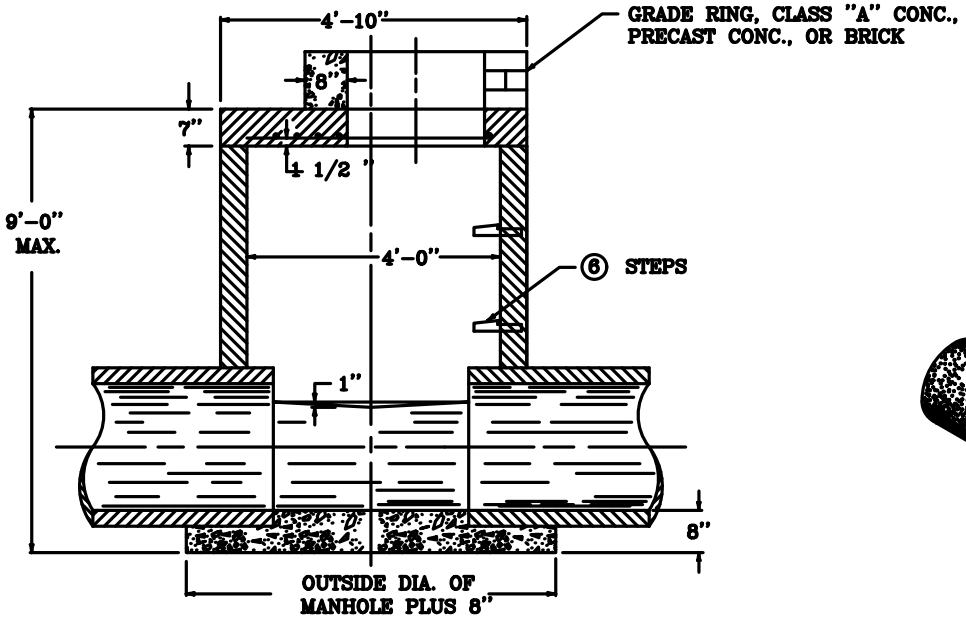

SECTION A–A

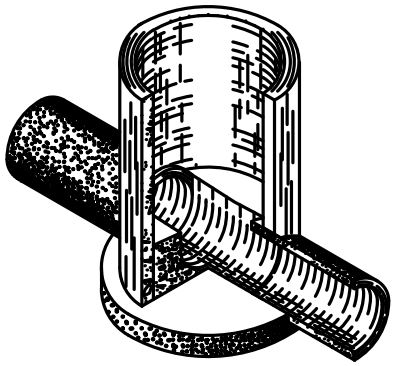

ISOMETRIC OF BASE

MANHOLE TYPE A (AML 24-40-1)

KY DAML 1–2013

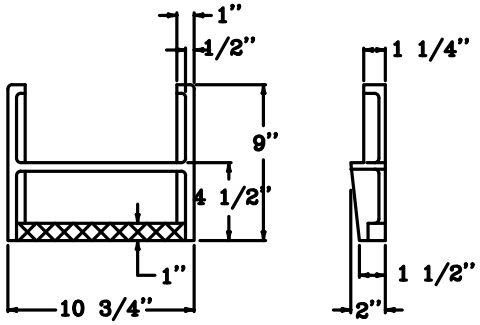

STEP TYPE NO. 1

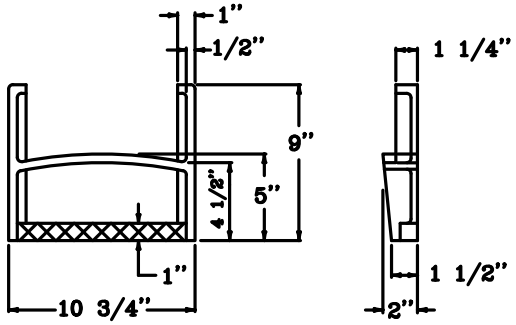

STEP TYPE NO. 2

NOTES

1. STEPS SHALL BE ASPHALT COATED CAST IRON OR POLYPROPYLENE PLASTIC COATED STEEL ROD OR OF A TYPE AND SIZE APPROVED BY THE ENGINEER.
2. STEPS SHALL BE SPACED APPROXIMATELY 12" TO 16" O.C. VERTICALLY SO AS TO FORM A CONTINUOUS LADDER.
3. STEPS SHALL BE REQUIRED IN MANHOLES WHEN THE STRUCTURE IS 4 FEET AND GREATER IN DEPTH. (MEASURE FROM FLOW LINE OF LOWEST PIPE TO TOP OF STRUCTURE).
4. THE TREADS OF ALL STEPS SHALL HAVE ANTI-SKID PROPERTIES FOR HAND AND FOOT GRIPS.

MANHOLE:

USE TYPE 1 OR TYPE 3 STEPS FOR MANHOLE PIPE CHAMBER AND STEP TYPE 2 OR TYPE 4 FOR MANHOLE TOWER.

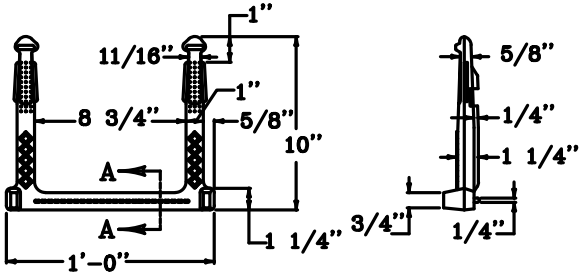

STEP TYPE NO. 3

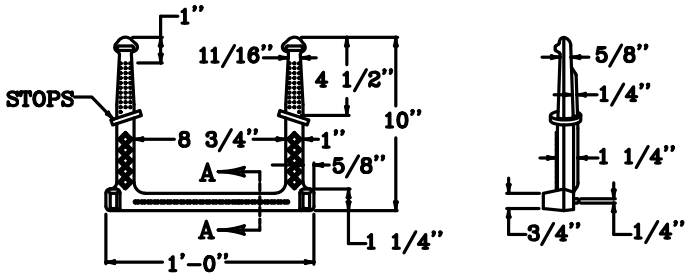

STEP TYPE NO. 4

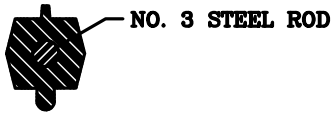

SECTION A-A

USE WITH AML 24-40-1

MANHOLE TYPE A- STEP DETAILS (AML 24-40-2)

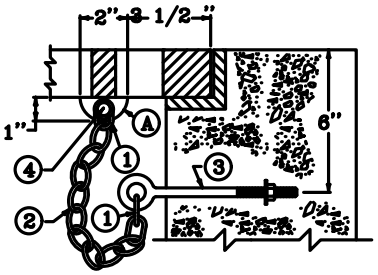

GRATE CONNECTED TO WALL

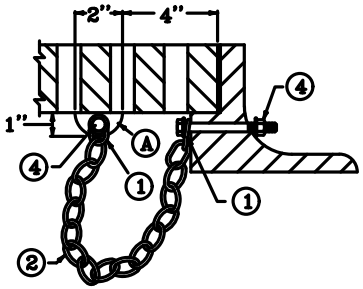

GRATE CONNECTED TO FRAME

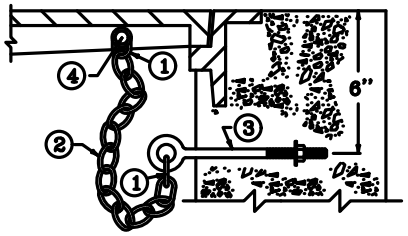

LID CONNECTED TO WALL

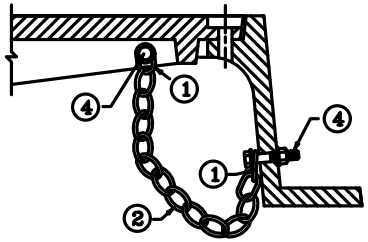

LID CONNECTED TO FRAME

TYPICAL ILLUSTRATIONS FOR CASTINGS

NOTES

1. CHAIN SHACKLE, OR COLD SHUT OF AN APPROVED TYPE.
2. 3/16" PROOF COIL CHAIN OF SUFFICIENT LENGTH TO ALLOW REMOVAL AND DISPLACEMENT OF GRATE OR LID.
3. 3/8" x 6" EYE BOLT, NUT, AND WASHER.
4. 3/8" HEX HEAD CAP SCREW (GRADE 2), NUT AND WASHERS. LENGTH DETERMINED BY THICKNESS OF FRAME OR GRATE. 7/16" DIA. HOLE FOR CAP SCREW. BATTER THREADS ON CAP SCREW TO PREVENT REMOVAL OF NUT.
5. 3/8" EYE BOLT (LENGTH DETERMINED BY THE FRAME DIMENSION).
6. ALL EYE BOLTS SHALL HAVE A CONTINUOUS OR SOLID EYE.
7. ALL HARDWARE SHALL BE GALVANIZED AND OF COMMERICAL QUALITY AND SHALL BE APPROVED BY THE ENGINEER.
8. THE COST OF THE COMPLETE SECURITY DEVICE, INSTALLED, SHALL BE INCIDENTAL TO THE COST OF THE STRUCTURE.
9. THE DESIGNS SHOWN ARE ACCEPTABLE; HOWEVER ARE SUBJECT TO CHANGE IF APPROVED IN WRITING BY THE ENGINEER.

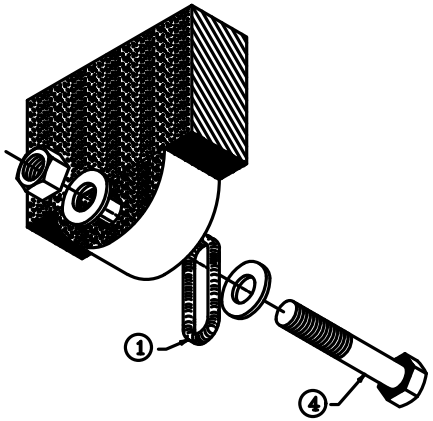

A

LUG ON CENTER CROSS MEMBER AND BOLT ASSEMBLY (AXONOMETRIC VIEW)

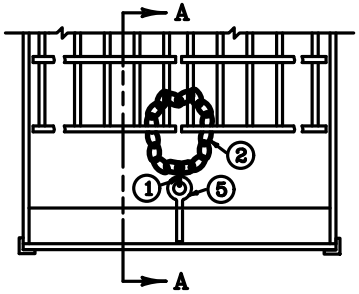

PLAN VIEW

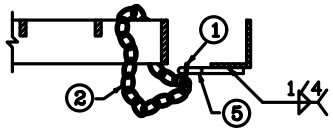

SECTION A–A
GRATE CONNECTED TO FRAME

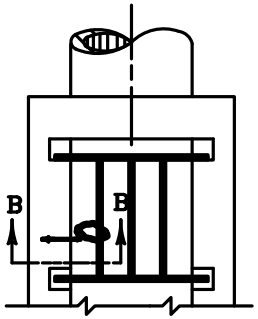

PLAN VIEW

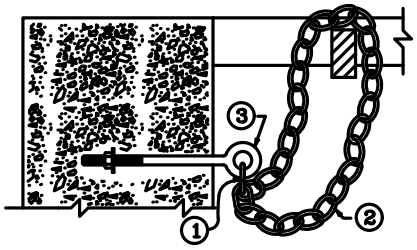

SECTION B–B

GRATE CONNECTED TO WALL

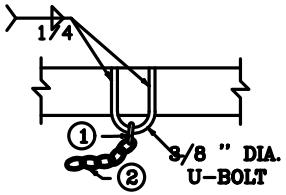

ALTERNATE FOR STRUCTURAL STEEL MEMBERS

TYPICAL ILLUSTRATIONS FOR STRUCTURAL STEEL UNITS

SECURITY DEVICES FOR FRAMES, GRATES & LIDS (AML 24-50-1)

KY DAML 1–2013

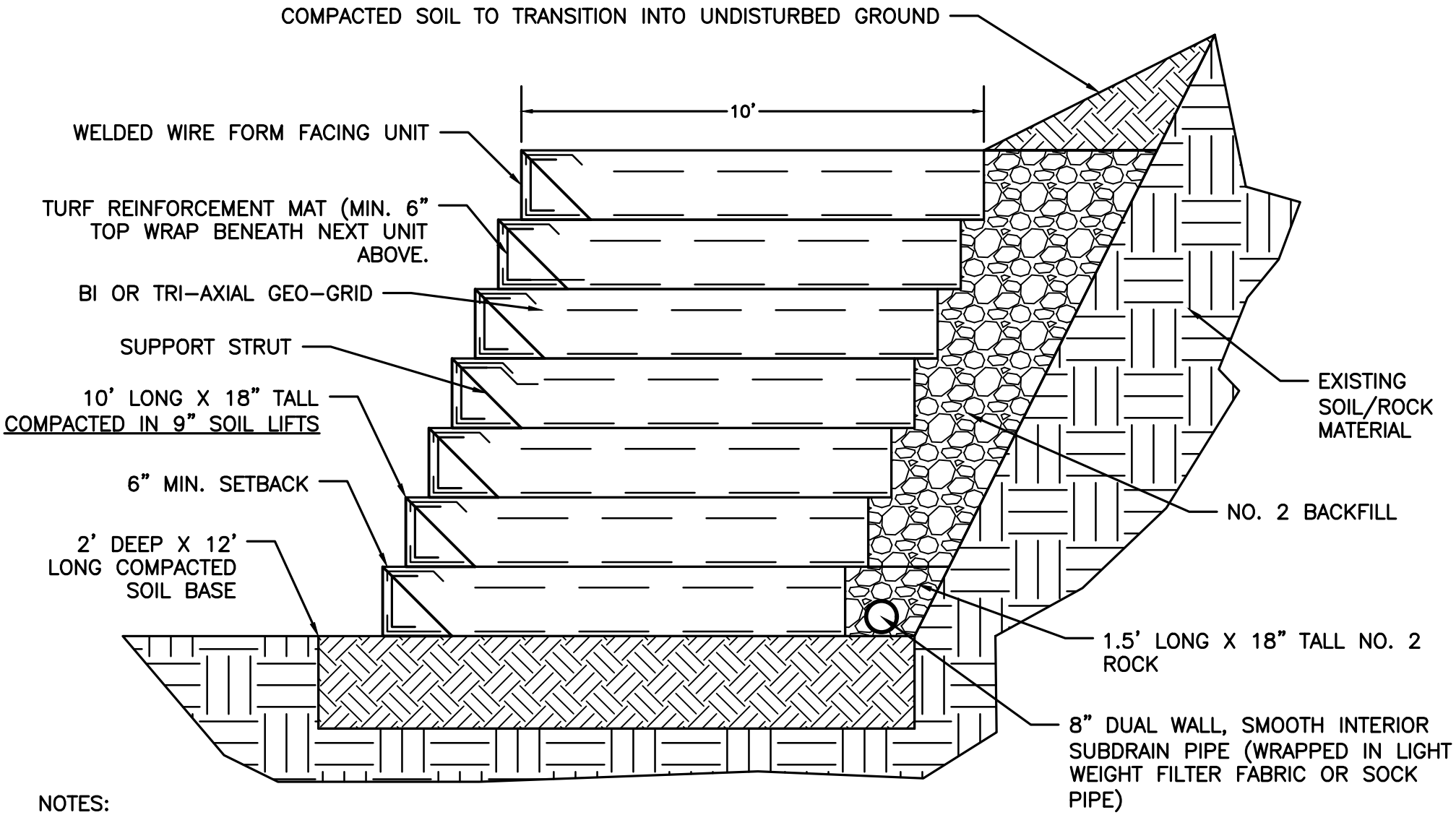

NOTES:

1. FIELD CONDITIONS WILL DICTATE FINAL BACKSLOPE, BUT SHOULD NOT BE MORE THAN 1:2 CUT AND REMAIN STABLE DURING CONSTRUCTION.

2. ALL SOIL RECEIVES 95% PROCTER COMPACTION.

USE WITH AML 30-10-2

WELDED WIRE REINFORCED SOIL WALL (AML 30-10-1)

KY DAML 4-2014

TYPICAL WELDED WIRE FACING UNITS

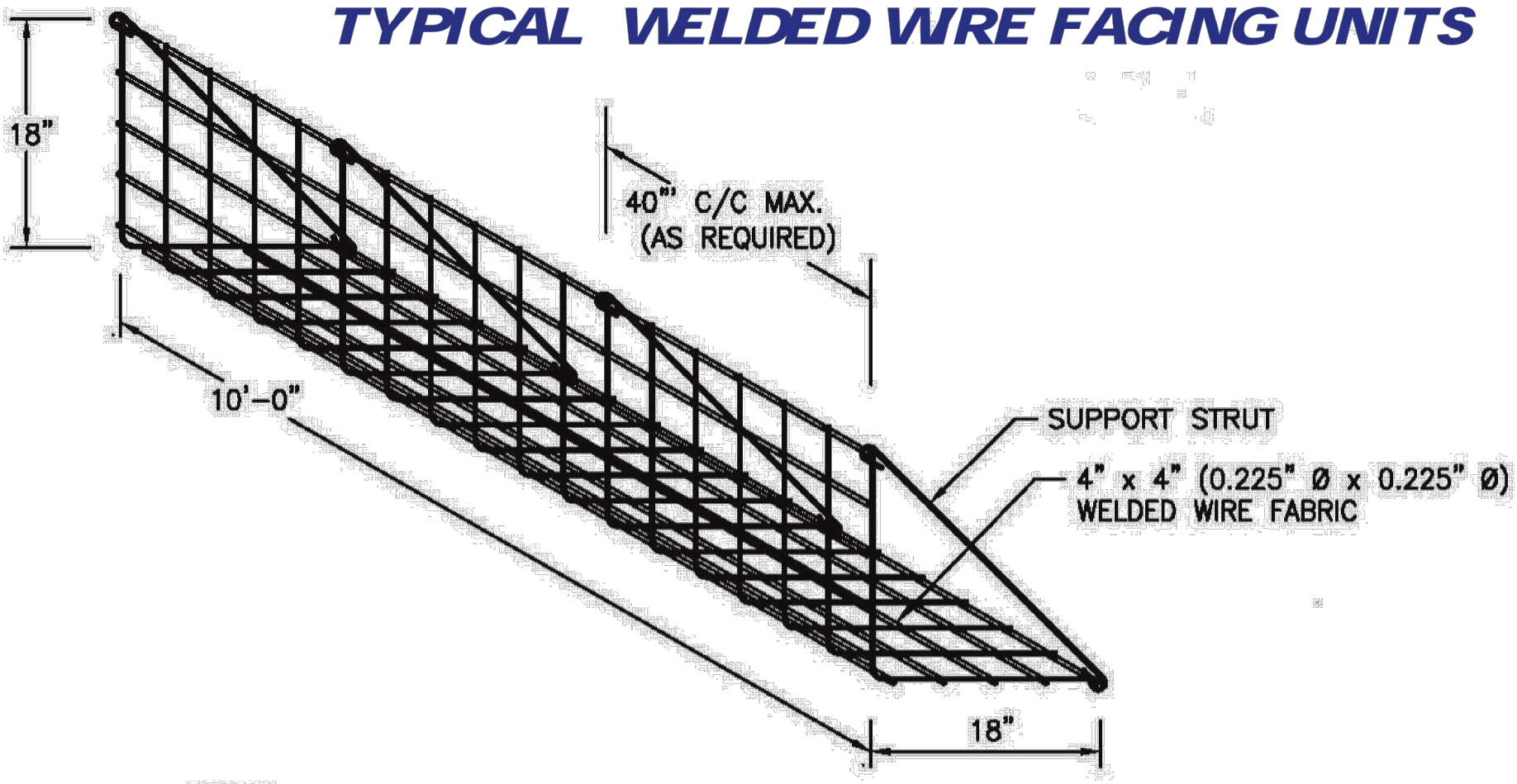

NOTES:

1. FACING TO CONSIST OF PREFABRICATED WWF 4" x 4" (0.225" Ø x 0.225" Ø) FORMS.
2. ALL FORMS AND STRUTS WILL BE FABRICATED WITH BLACK WIRE.
3. OVERALL LENGTH OF WIRE FORMS IS 10'-0". EFFECTIVE CONSTRUCTED WIDTH IS 9'-8" WITH 4" OVER LAPPING AT ENDS.

WELDED-WIRE REINFORCED SOIL WALL- FORM FACING UNITS (AML 30-10-2)

KY DAML 1-2013

1. REMOVE LOOSE MATERIAL FROM HIGHWALL PRIOR TO WALL CONSTRUCTION.
2. CONSTRUCT BASE ON A CONCRETE FOOTER UNLESS DIRECTED OTHERWISE BY ENGINEER.
3. SEE DESIGN DRAWINGS IF CHAIN–LINK FENCE (NOT SHOWN) IS REQUIRED.
4. IF DESIGN HEIGHT IS TO EXCEED 8' THEN WALL MUST BE SPECIALLY DESIGNED.

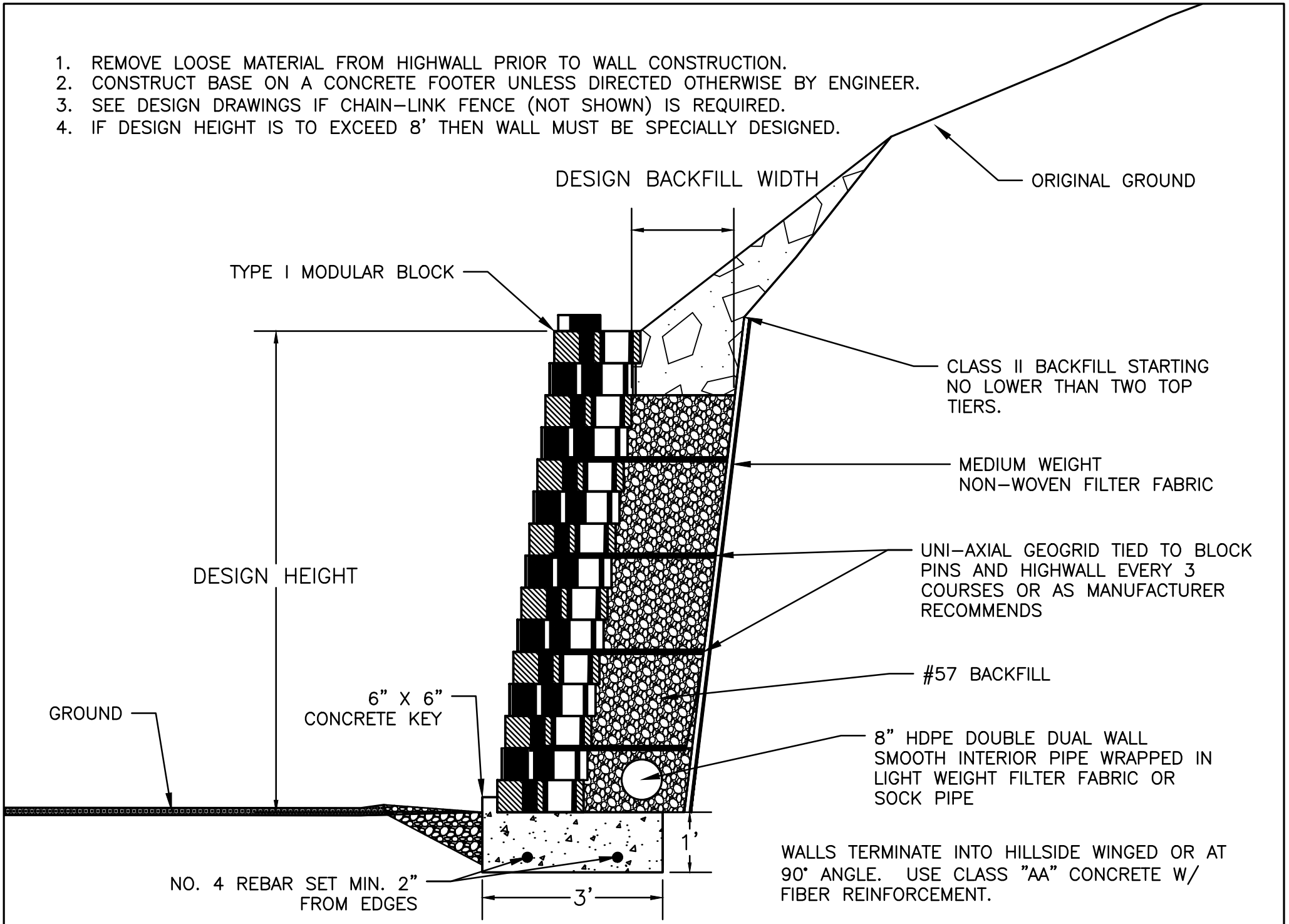

NON-REINFORCED BLOCK WALL- TYPE I (AML 30-20-1)

KY DAML 10–2013

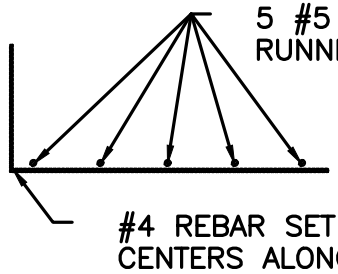

FOOTER REINFORCEMENT DETAIL
NTS

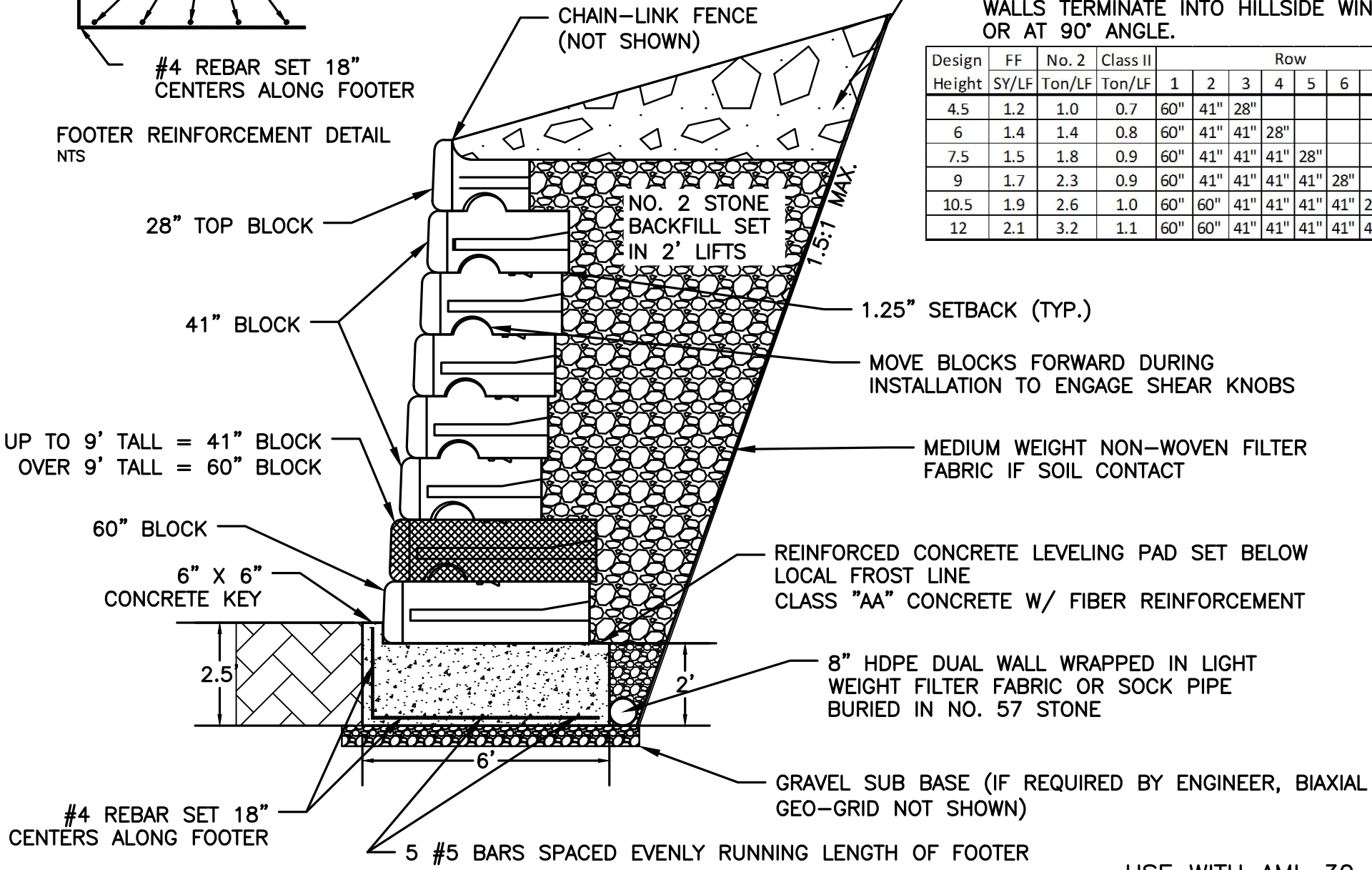

WALLS TERMINATE INTO HILLSIDE WINGED OR AT 90° ANGLE.

Design	FF	No. 2	Class II	Row							
Height	SY/LF	Ton/LF	Ton/LF	1	2	3	4	5	6	7	8
4.5	1.2	1.0	0.7	60"	41"	28"					
6	1.4	1.4	0.8	60"	41"	41"	28"				
7.5	1.5	1.8	0.9	60"	41"	41"	41"	28"			
9	1.7	2.3	0.9	60"	41"	41"	41"	41"	28"		
10.5	1.9	2.6	1.0	60"	60"	41"	41"	41"	41"	28"	
12	2.1	3.2	1.1	60"	60"	41"	41"	41"	41"	41"	28"

USE WITH AML 30-20-3

NON-REINFORCED BLOCK WALL- TYPE II (AML 30-20-2)

KY DAML 8-2017

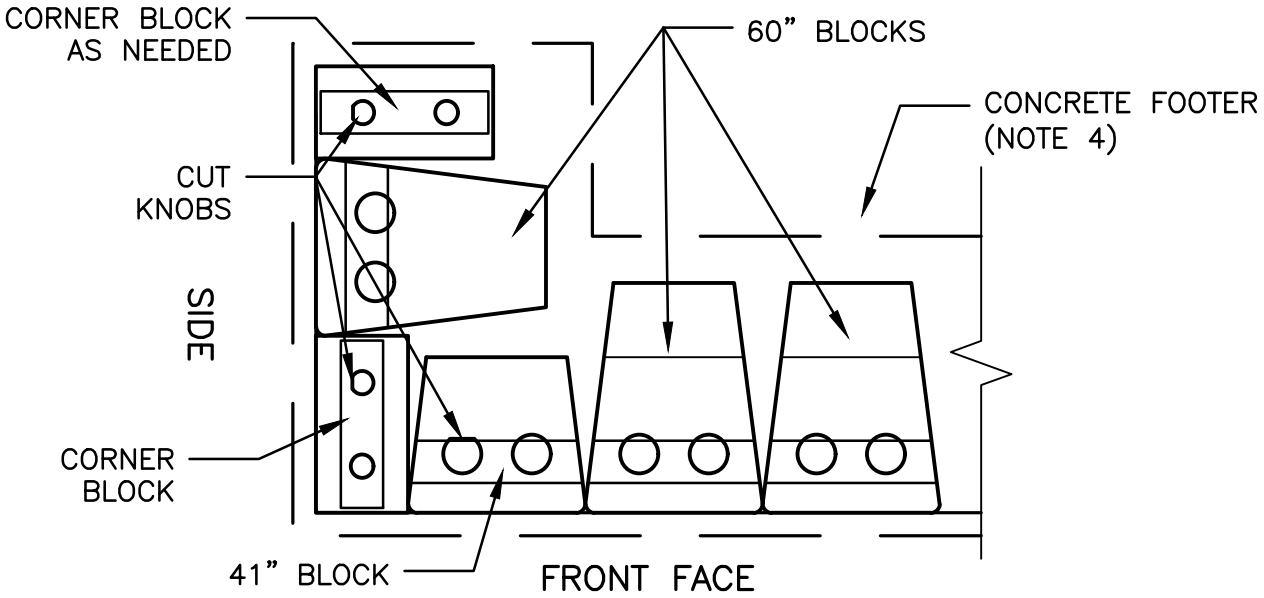

ODD NUMBER ROWS
(INCLUDES BASE)

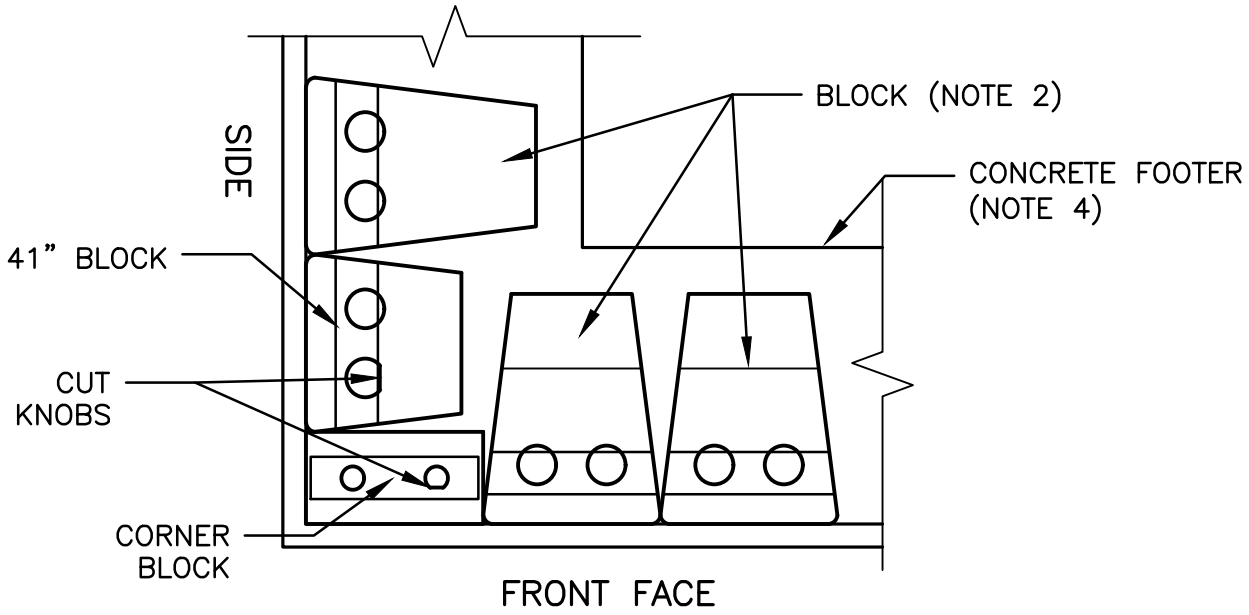

EVEN NUMBER ROWS

1. CORNER BLOCKS ARE 46" X 24" W/ 6" KNOBS. BASE COURSE HAS STRAIGHT BOTTOM.
2. SEE 30–20–2 FOR BLOCK SIZE PER ROW HEIGHT.
3. CUT EDGE OF 10" KNOBS ON 41" BLOCKS AND 6" KNOB ON CORNER BLOCK W/ CHOP SAW TO PROVIDE CLEARANCE FOR BLOCKS IN THE NEXT ROW.
4. LAP LONGITUDINAL BARS IN CONCRETE FOOTER AT CORNERS.

NON-REINFORCED BLOCK WALL- TYPE II 90° OUTSIDE CORNER (AML 30-20-3)

USE WITH AML 30–20–2

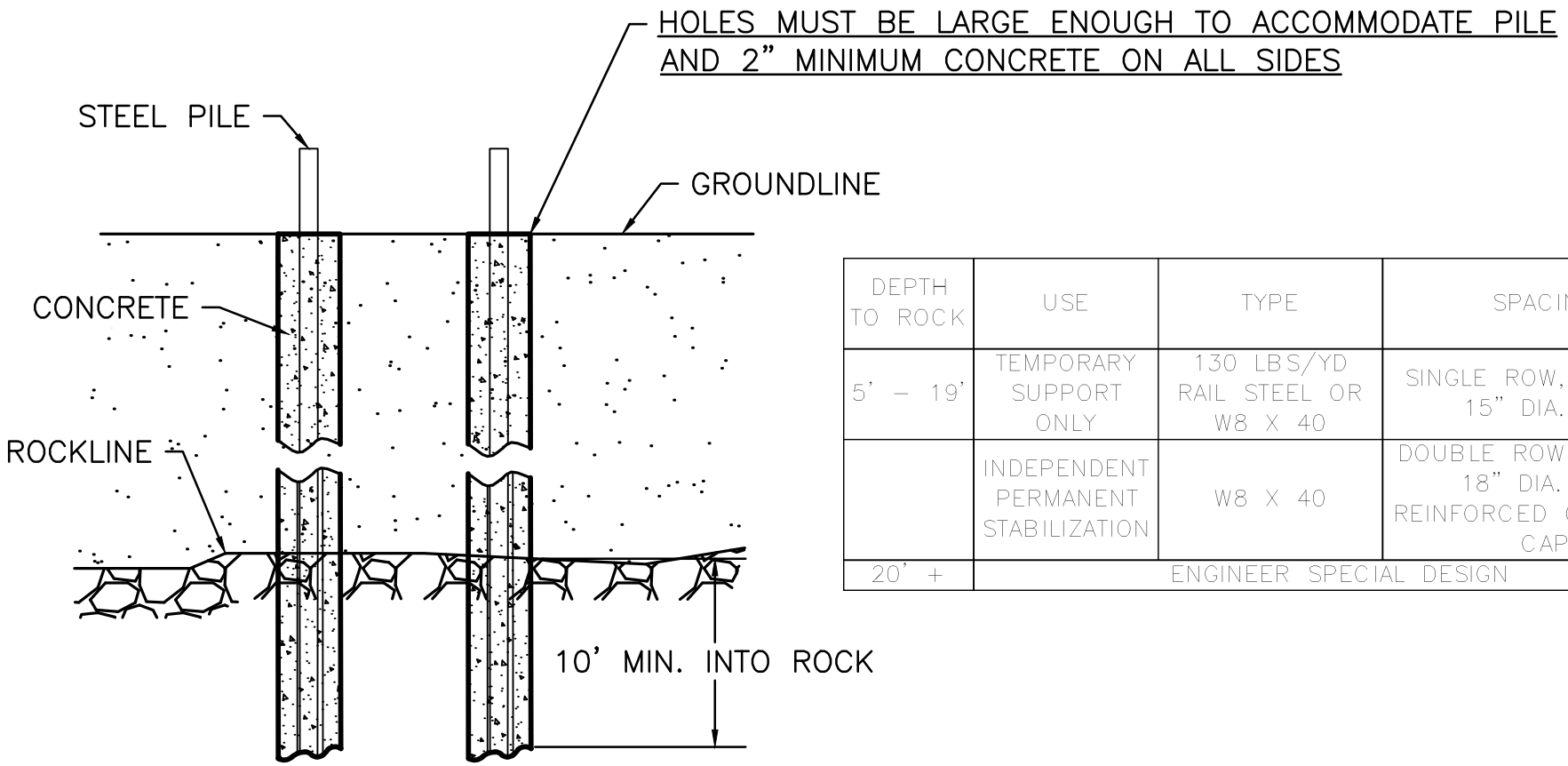

DEPTH TO ROCK	USE	TYPE	SPACING
5' – 19'	TEMPORARY SUPPORT ONLY	130 LBS/YD RAIL STEEL OR W8 X 40	SINGLE ROW, 36" OC, 15" DIA. MIN
	INDEPENDENT PERMANENT STABILIZATION	W8 X 40	DOUBLE ROW, 48" OC, 18" DIA. MIN, REINFORCED CONCRETE CAP
20' +	ENGINEER SPECIAL DESIGN		

NOTES:

1. BEAMS SHALL BE ORIENTED WITH FLANGES PERPENDICULAR TO POSSIBLE SLIDE MOVEMENT.
2. BEAMS SHALL BE ENCASED WITH CONCRETE A MINIMUM 2" CONCRETE ON ALL SIDES FOR THE ENTIRE DEPTH OF THE HOLE.
3. BEAMS SHALL BE STRAIGHT AND STRUCTURALLY SOUND. ENGINEER MUST AUTHORIZE SPLICING. NO SPLICING SHALL BE ALLOWED IN RAILROAD RAILS.
4. THE ENGINEER MAY SPECIFY THE SIZE OR TYPE OF STEEL (INCLUDING USE OF RAILROAD STEEL RAILS) ON DRAWINGS, IN THE SPECIAL CONDITIONS, OR IN WRITING DURING CONSTRUCTION.

SEE AML 30–30–2 FOR CAP DETAILS

STEEL PILES- TEMPORARY AND INDEPENDENT SUPPORT (AML 30-30-1)

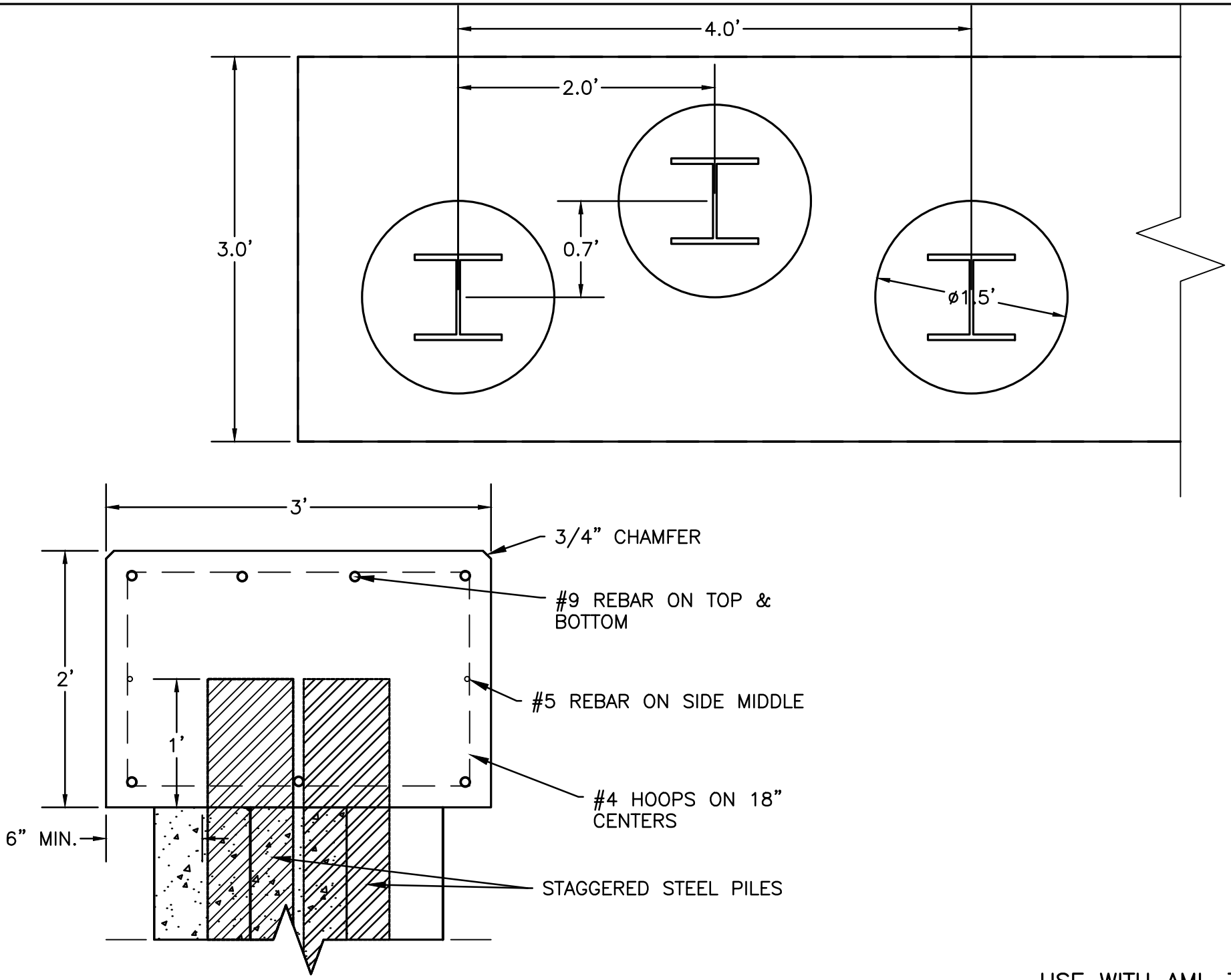

USE WITH AML 30–30–1

STEEL PILES WITH REINFORCED CONCRETE CAP (AML 30-30-2)

KY DAML 8–2017

1. BURY ONLY 1/2 BASKET FOR WALLS SHORTER THAN 9 FT.
2. GABION WALLS MUST BE CONSTRUCTED IN A STAGGER PATTERN AS SHOWN. THIS MUST BE DONE FOR BOTH DIRECTIONS OF THE WALL.

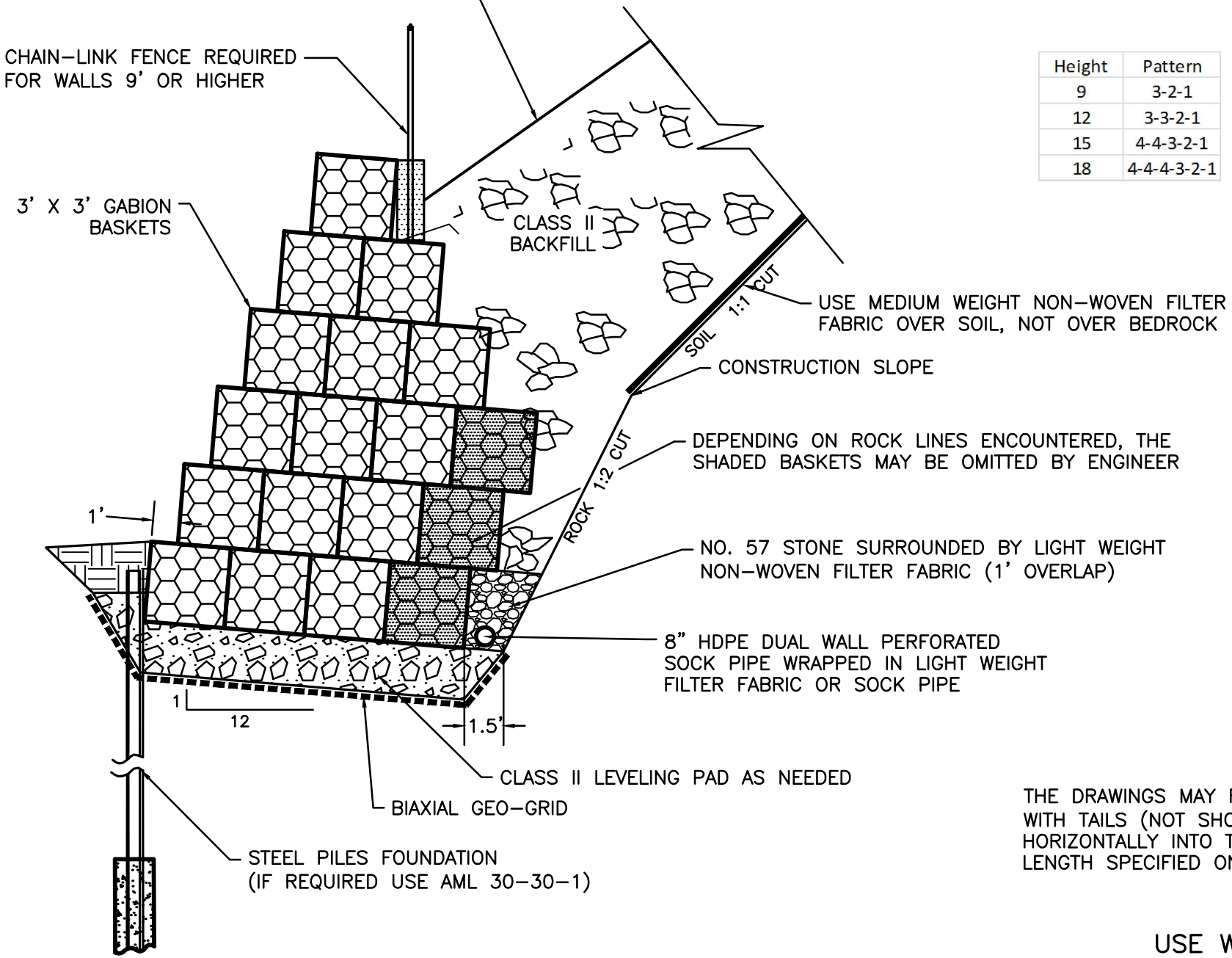

Height	Pattern
9	3-2-1
12	3-3-2-1
15	4-4-3-2-1
18	4-4-4-3-2-1

THE DRAWINGS MAY REQUIRE GABIONS WITH TAILS (NOT SHOWN). TAILS EXTEND HORIZONTALLY INTO THE BACKFILL AT LENGTH SPECIFIED ON DRAWINGS.

USE WITH AML 70–30–1

GABION RETAINING WALL (AML 30-40-1)

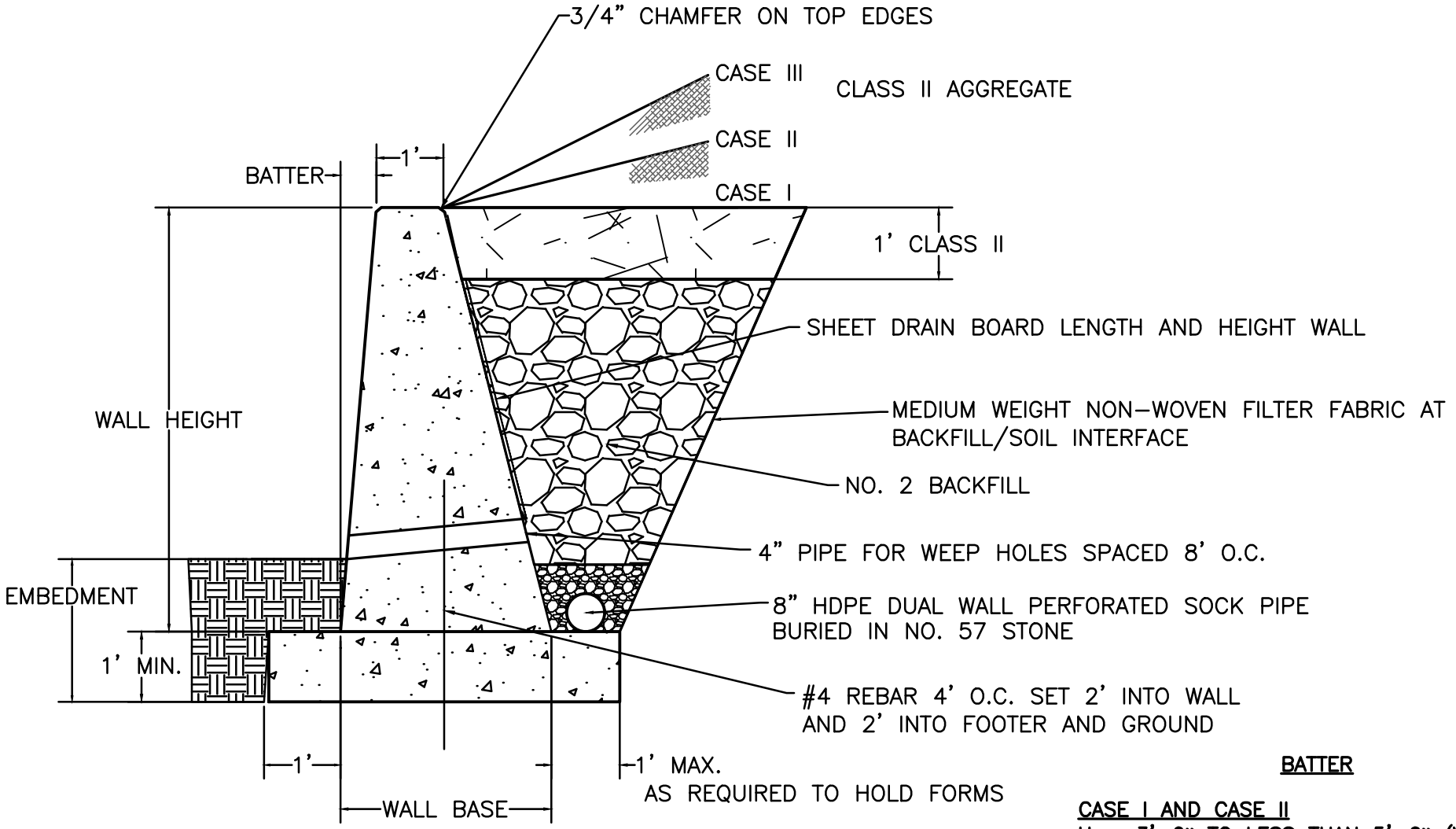

EMBEDMENT

1. MINIMUM EMBEDMENT VALUE FOR FIRM EARTH IS 2'-0".
2. CASE III REQUIRES AN EMBEDMENT OF 1/4 H FOR A WALL OVER 8'.
3. FOR FOOTER SET ON ROCK 1/2 FOOTER DEPTH WILL BE SET IN ROCK.

WALLS TERMINATE INTO HILLSIDE WINGED OR AT 90° ANGLE

BATTER

CASE I AND CASE II
H = 3'-0" TO LESS THAN 5'-0" (VERTICAL)
H = 5'-0" TO LESS THAN 10'-0" (12:1)
H = 10'-0" TO LESS THAN 12'-0" (6:1)

CASE III
H = 3'-0" TO LESS THAN 5'-0" (12:1)
H = 5'-0" TO LESS THAN 12'-0" (6:1)

USE WITH AML 30-50-2

CONCRETE GRAVITY WALL (AML 30-50-1)

THE RETAINING WALL DEPICTED ON THIS DRAWING SHALL BE USED WHEN THE HEIGHT ("H" DIMENSION) OF THE WALL IS 12'–0" OR LESS PROVIDED THE FILL COMPLIES WITH THE FOLLOWING CONDITIONS:

CASE I: WALL BACKFILL SLOPES DOWN, IS LEVEL, OR SLOPES UP FROM WALL AT 20:1 OR FLATTER SLOPE ALLOWS FOR BACKFILL WHICH WOULD BE LEVEL EXCEPT FOR THE SLOPE REQUIRED TO FACILITATE PROPER DRAINAGE.

CASE II: BACKFILL SLOPES UP STEEPER THAN 20:1, BUT NOT STEEPER THAN 4:1.

CASE III: BACKFILL SLOPES UP STEEPER THAN 4:1, BUT NOT STEEPER THAN 2:1. WHEN "H" IS GREATER THAN 8' (6' FRONT FACE), INCREASE THE EMBEDMENT DEPTH TO 1/4 "H."

SPECIAL DESIGNS SHALL BE REQUIRED WHEN THE FOLLOWING CONDITIONS EXIST:

A. WALL HEIGHT IS GREATER THAN 12'0"
B. WALL IS SURCHARGED WITH DEAD LOAD FILL SLOPES STEEPER THAN 2:1
C. WALL IS SURCHARGED WITH A LIVE LOAD, WITHOUT THE LIMITS OF A 1:1 SLOPE EXTENDING FROM THE BASE OF THE WALL.

AREAS AND VOLUMES HAVE BEEN COMPUTED WITHOUT REDUCTION FOR BEVELED EDGES OR PIPE DRAINS. WHEN A RETAINING WALL VARIES IN HEIGHT, THE PRISMOIDAL FORMULA SHALL BE USED IN COMPUTING VOLUMES. THE FOOTER IS NOT INCLUDED IN THE TABULATED VOLUMES.

1. PLACE BI–AXIAL GEO–GRID UNDER THE BASE OF THE WALL UNLESS ON BEDROCK.
2. ALL CONCRETE SHALL BE 4,000 PSI CONCRETE WITH FIBER REINFORCEMENT
3. THE BASE OF THE FOOTER MUST BE SET AT 24" DEEP (MIN.) OR BELOW LOCAL FROSTLINE (WHICHEVER IS DEEPER)
4. RAISE THE MIDDLE PORTION OF THE SUBDRAIN ~2" TO PUT A SLIGHT GRADE ON PIPE

WALL HEIGHT (EXCLUDING FOOTER)	WALL BASE (EXCLUDING FOOTER)	FOOTER CONCRETE	WALL CONCRETE
		CY/LF	CY/LF
CASE I OR II OR III			
3'–0"	1'–6"	0.13	0.14
3'–6"	1'–9"	0.14	0.18
4'–0"	2'–0"	0.15	0.23
4'–6"	2'–3"	0.16	0.27
5'–0"	2'–6"	0.17	0.32
5'–6"	2'–9"	0.18	0.40
6'–0"	3'–0"	0.19	0.48
6'–6"	3'–3"	0.19	0.55
7'–0"	3'–6"	0.20	0.63
7'–6"	3'–9"	0.21	0.71
8'–0"	4'–0"	0.22	0.78
8'–6"	4'–3"	0.23	0.86
9'–0"	4'–6"	0.24	0.94
9'–6"	4'–9"	0.25	1.01
CASE I			
10'–0"	5'–0"	0.26	1.11
10'–6"	5'–3"	0.27	1.22
11'–0"	5'–6"	0.28	1.33
11'–6"	5'–9"	0.29	1.44
12'–0"	6'–0"	0.30	1.56
CASE II OR III			
10'–0"	6'–0"	0.30	1.3
10'–6"	6'–3"	0.31	1.42
11'–0"	6'–6"	0.31	1.54
11'–6"	6'–9"	0.32	1.66
12'–0"	7'–0"	0.33	1.78

USE WITH AML 30–50–1

CONCRETE GRAVITY WALL- NOTES & QUANTITIES (AML 30-50-2)

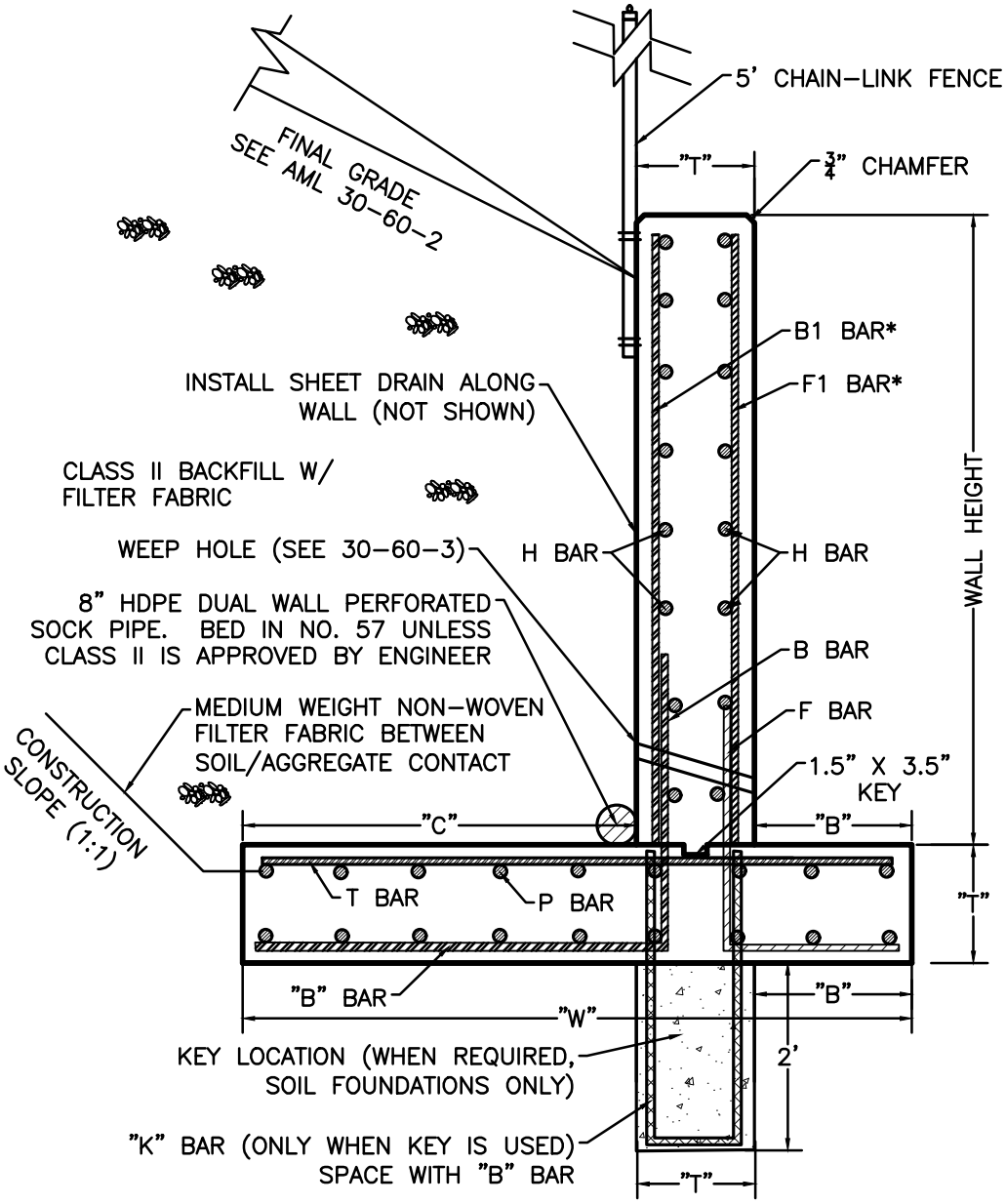

KEY AND FOOTING SHALL BE SAME CONCRETE POUR

THE BASE OF THE FOOTER MUST BE SET MIN. 24" DEPTH.

WALLS TERMINATE INTO HILLSIDE WINGED OR AT 90° ANGLE.

WALL DIMENSIONS (FEET)				
WALL HT	"B"	"C"	"T"	"W"
5'-7'	2.00	3.00	1.00	6.00
8'-10'	2.25	3.50	1.25	7.00
11'-13'	2.75	4.00	1.25	8.00
14'-16'	3.50	5.00	1.50	10.00
17'-20'	4.00	6.25	2.25	12.50

ALL REINFORCEMENT IS TO BE SPACED AT 12 INCH CENTERS

REINFORCEMENT REQUIREMENTS						
WALL HT	B BAR	F BAR	H BAR	P BAR	T BAR	K BAR
5'-7'	#5	#5	#4	#5	#5	#4
8'-10'	#6	#5	#5	#5	#6	#4
11'-13'	#7	#5	#5	#5	#7	#4
14'-16'	#8	#5	#6	#5	#8	#4
17'-20'	#9	#5	#6	#5	#9	#4

* B1 BAR IS TO BE ONE BAR SIZE SMALLER THAN "B" BAR
* F1 BAR IS TO BE ONE BAR SIZE SMALLER THAN "F" BAR

NUMBER OF H BARS TO USE IS EQUAL TO WALL HEIGHT X 2
NUMBER OF P BARS TO USE IS EQUAL TO "W" (FOOTING WIDTH) X 2

BAR DIMENSIONS (FEET)			
WALL HT	B BAR	F BAR	K BAR
5'-7'	L= 3.00', M= 2.75'	L= 2.75', N= 1.75'	L= 2.75', N= 0.50'
8'-10'	L= 3.33', M= 3.25'	L= 2.75', N= 2.0'	L= 3.0', N= 0.75'
11'-13'	L= 4.00', M= 3.75'	L= 3.50', N= 2.50'	L= 3.0', N= 0.75'
14'-16'	L= 5.00', M= 4.75'	L= 3.75', N= 3.25'	L= 3.25', N= 1.00'
17'-20'	L= 7.25', M= 6.00'	L= 4.25', N= 3.75'	L= 4.0', N= 1.50'

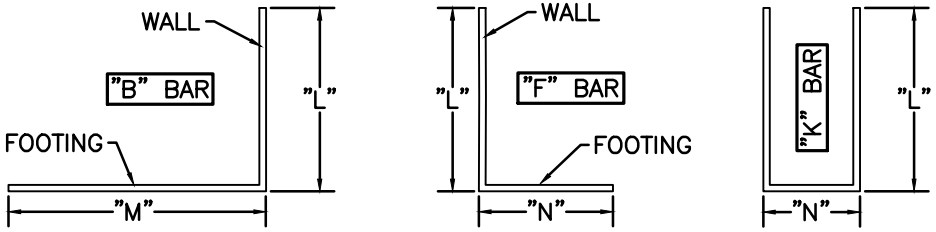

(WHEN REQUIRED)

USE WITH AML 30-60-2 TO 5

REINFORCED CONCRETE WALL (HEIGHTS FROM 5' TO 20') (AML 30-60-1)

KY DAML 7-2017

CONSTRUCTION NOTES:

ALL FOUNDATION EXCAVATION AREA SHALL BE APPROVED BY THE ENGINEER, PRIOR TO THE PLACEMENT OF FORMWORK AND REBAR PLACEMENT. IN THE OPINION OF THE ENGINEER, ANY AREA NOT SUITABLE FOR FOOTING PLACEMENT (I.E. SOFT, SATURATED, ETC.) SHALL BE OVER EXCAVATED AND BACKFILLED WITH MECHANICALLY COMPACTED DENSE GRADE AGGREGATE AS DIRECTED BY THE ENGINEER.

ALL REINFORCING BARS ARE 2" FROM EDGE UNLESS OTHERWISE NOTED.

SAFETY FENCE MAY BE BOLTED TO THE WALL OR SET IN PLACE WITH CONCRETE BEHIND THE WALL. DO NOT PLACE FENCE IN THE WALL.

CONSTRUCTION JOINTS SHALL BE PLACED A MINIMUM OF 10' & A MAXIMUM OF 20'.

ALL STEEL REINFORCEMENT SHALL BE 60 KSI.

ALL CONCRETE SHALL BE 4,000 PSI WITH FIBER REINFORCEMENT.

FINAL SLOPE SHALL BE MAX 2:1 FROM THE TOP EDGE OF THE WALL, MAX. 1.5:1 IF ROCK FROM WALL IS LEVEL FOR 10' THEN SLOPED UP.

AT THE CONTRACTOR'S REQUEST, THE LENGTHS OF THE LONGITUDINAL REINFORCEMENT MAY BE CHANGED WITH PRIOR APPROVAL OF THE ENGINEER. LONGER OR SHORTER LONGITUDINAL BARS MAY BE USED TO ACCOMMODATE CONSTRUCTION OR FOR ECONOMY. ALL WORK AND/OR MATERIALS REQUIRED FOR CHANGES IN THE LENGTHS OF LONGITUDINAL REINFORCEMENT SHALL BE AT NO COST TO AML. SPLICES MUST BE IN ACCORDANCE WITH THE "STEEL" SECTION OF THE TECHNICAL SPECIFICATIONS.

CONCRETE VOLUMES

WALL HEIGHT	VOLUME (PER FOOT OF WALL LENGTH)	Key Volume (PER FOOT OF WALL LENGTH)
5'-7'	V= 0.23 + (.04 x H)	0.074 Cu. Yds.
8'-10'	V= 0.32 + (.05 x H)	0.093 Cu. Yds.
11'-13'	V= 0.37 + (.05 x H)	0.093 Cu. Yds.
14'-16'	V= 0.56 + (.06 x H)	0.111 Cu. Yds.
17'-20'	V= 1.04 + (.09 x H)	0.167 Cu. Yds.

V= Cu. Yds. PER FOOT OF WALL LENGTH
H= ACTUAL WALL HEIGHT USED FOR DESIGN

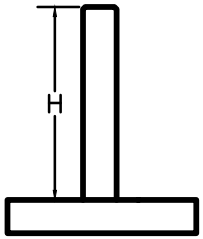

Example: 12' Wall Height, 100' Long, with Key

V= 0.37+(.05 x 12) + 0.093 = 1.063
Total V= 1.063 x 100' = 106.3 Cu. Yds.

REINFORCEMENT QUANTITIES

WALL HEIGHT	FOOTING*	WALL**	ADD FOR "K" BAR
5'-7'	29.50	2.68	4.00
8'-10'	35.00	3.80	4.50
11'-13'	54.63	4.26	4.50
14'-16'	80.22	5.72	5.00
17'-20'	118.38	6.34	6.35

* PER FOOT OF WALL LENGTH
** PER FOOT OF WALL HEIGHT AND PER FOOT OF WALL LENGTH

Example: 12' Wall Height, 100' Long, with Key

[(4.26 x 12) + 54.63 + 3.85] x 100 = 10,960 LBS. REINFORCEMENT

WALL HEIGHT — "K" BAR BECAUSE USING KEY

USE WITH AML 30–60–1

REINFORCED CONCRETE WALL- CONSTRUCTION NOTES & QUANTITIES (AML 30-60-2)

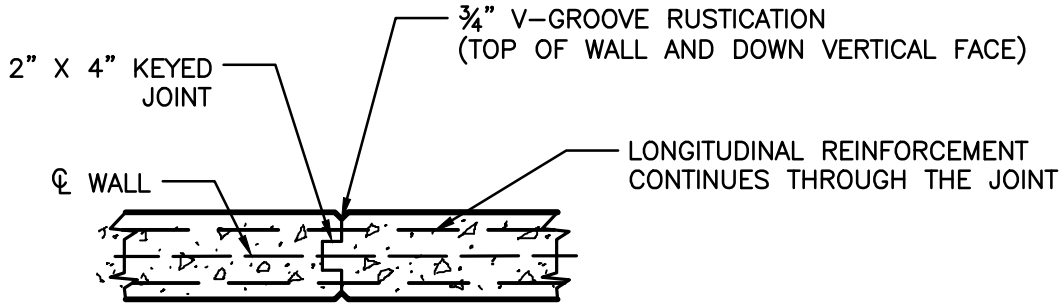

CONSTRUCTION JOINT DETAIL

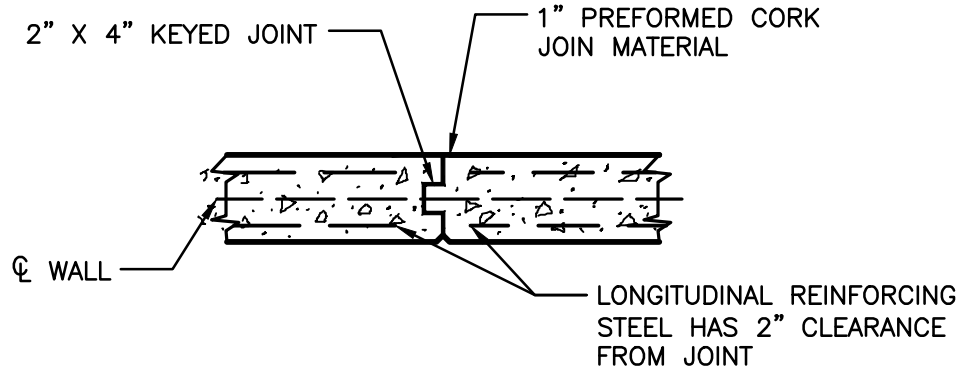

EXPANSION JOINT DETAIL

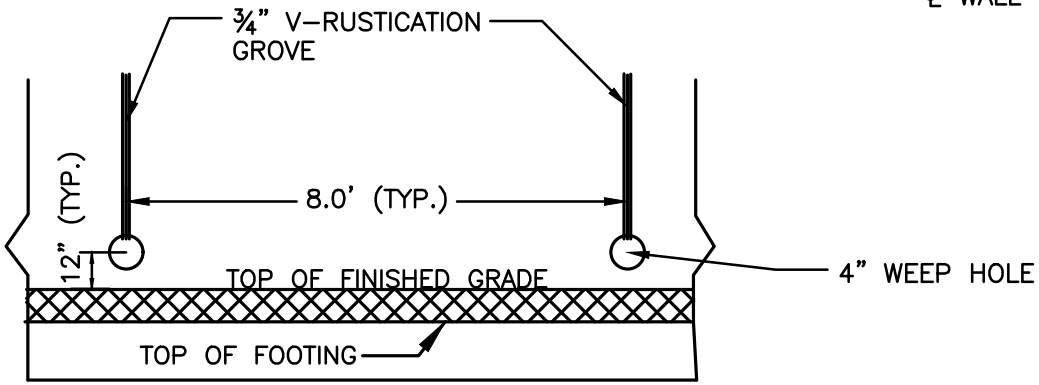

WEEP HOLE DETAIL

USE WITH AML 30–60–1

REINFORCED CONCRETE WALL- JOINTS & WEEP HOLES (AML 30-60-3)

KY DAML 1–2013

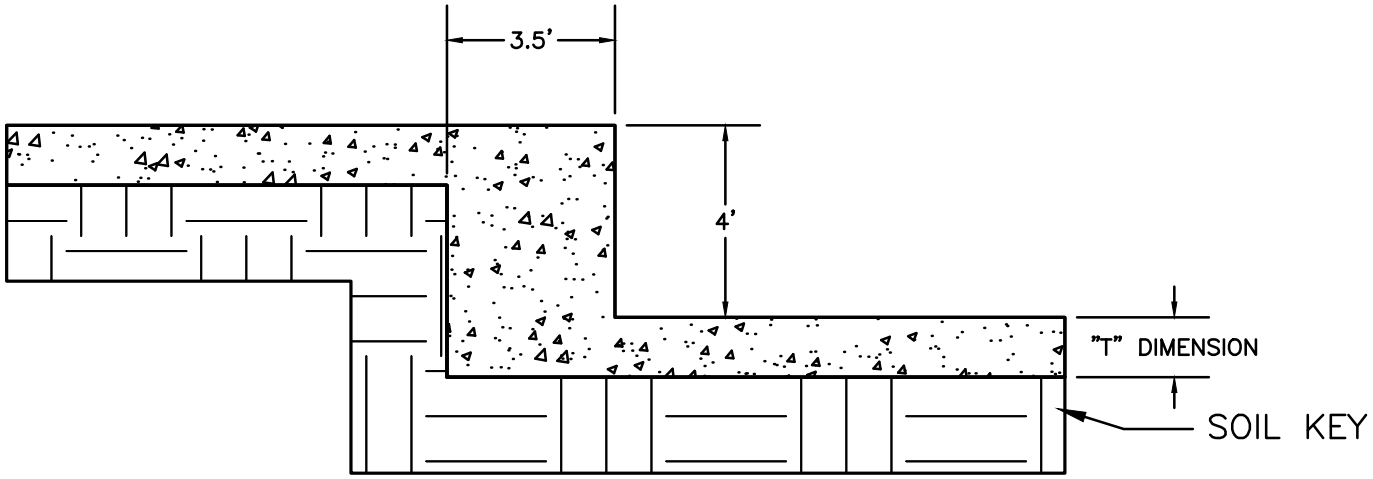

STEP FOOTER CONCRETE

NTS

STEP–DOWN REINFORCEMENT GUIDE
#5 REBAR (NTS)

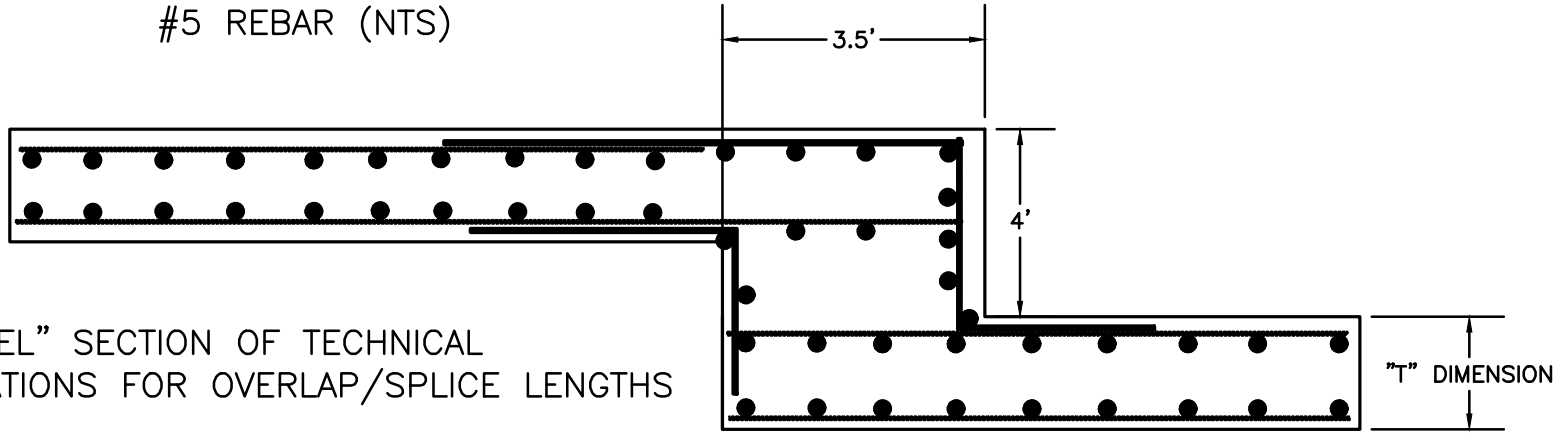

SEE "STEEL" SECTION OF TECHNICAL
SPECIFICATIONS FOR OVERLAP/SPLICE LENGTHS

NTS

STEP FOOTER REINFORCEMENT

USE WITH AML 30–60–1 TO 6

REINFORCED CONCRETE WALL- STEP FOOTER (AML 30-60-4)

KY DAML 1–2013

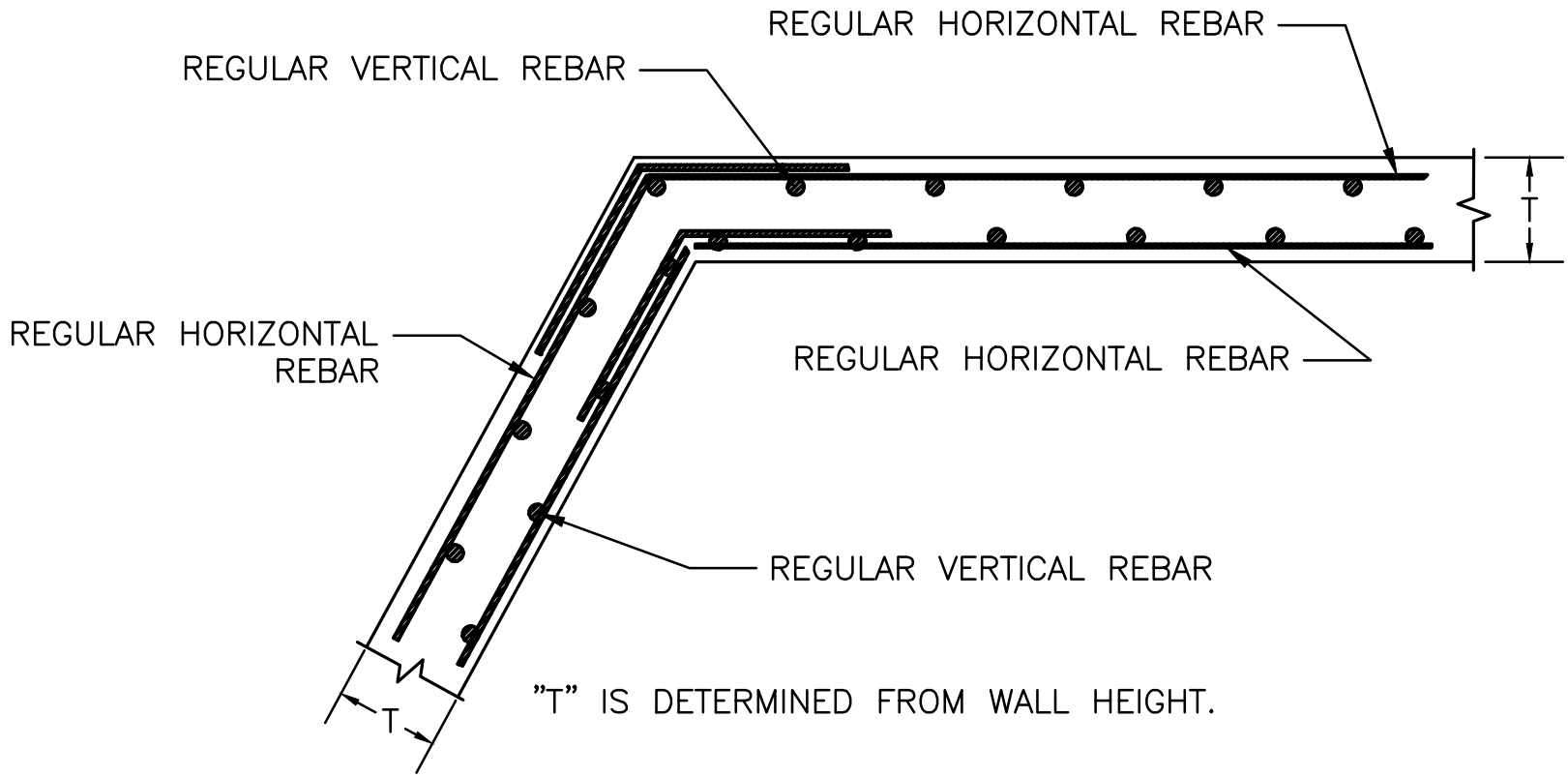

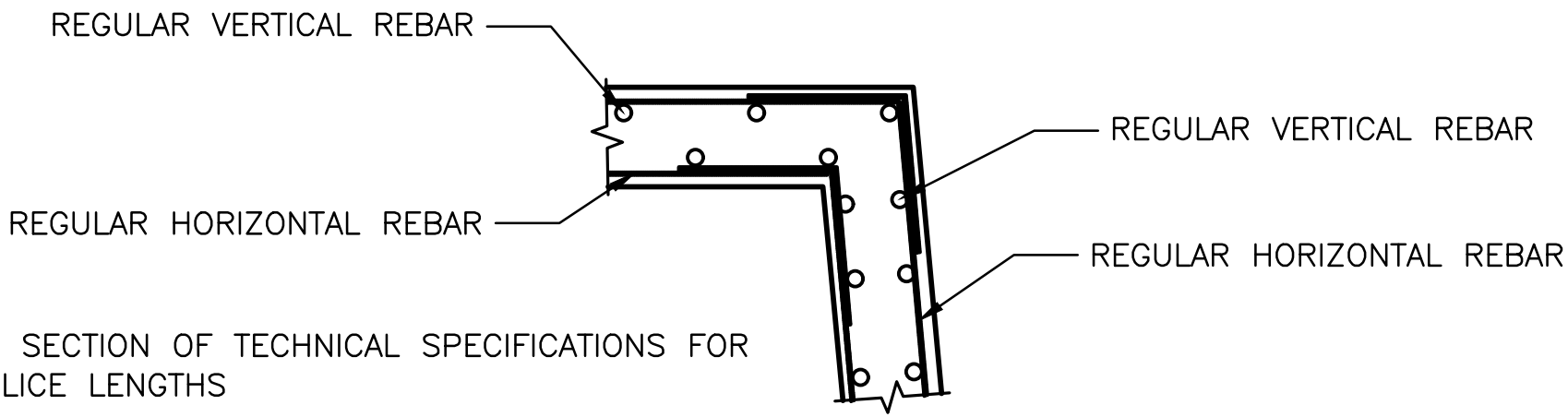

SEE "STEEL" SECTION OF TECHNICAL SPECIFICATIONS FOR OVERLAP/SPLICE LENGTHS

USE WITH AML 30–60–1 TO 6

REINFORCED CONCRETE WALL- BENDS (AML 30-60-5)

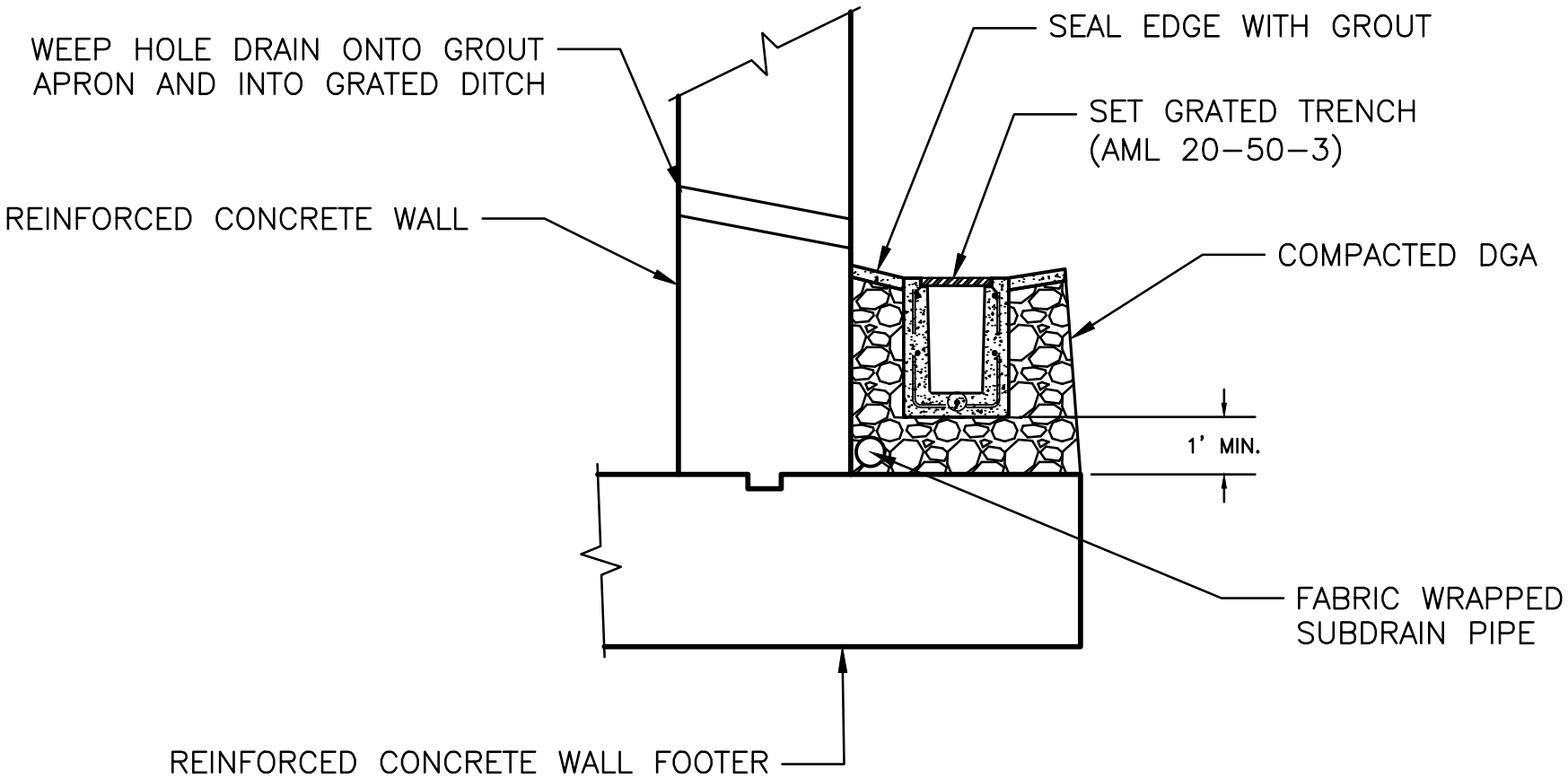

USE WITH AML 30–60–1, 20–50–3 & 4, 23–50–1

REINFORCED CONCRETE WALL W/ GRATED TRENCH DRAIN (AML 30-60-6)

KY DAML 1–2013

NOTE: ALL CONCRETE 4,000 PSI

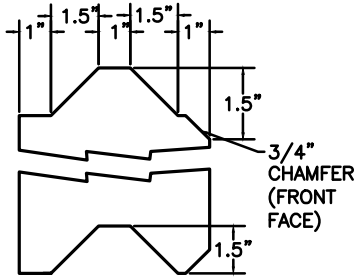

PRECAST CONCRETE LAGGING KEY

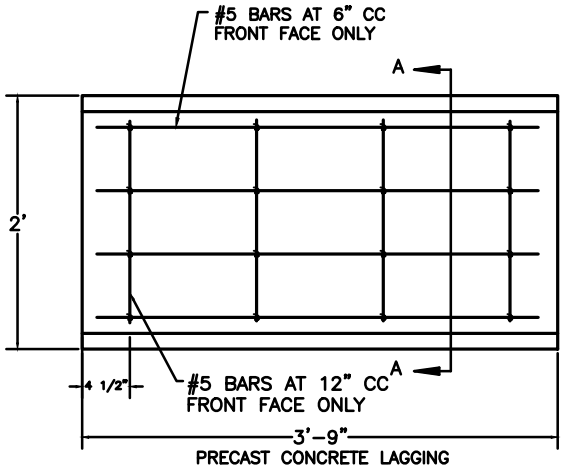

PRECAST CONCRETE LAGGING

NOTE:

SEE PROFILE SHEET AND CROSS SECTIONS OF THE DESIGN DRAWINGS FOR SPECIFIC WALL HEIGHTS.

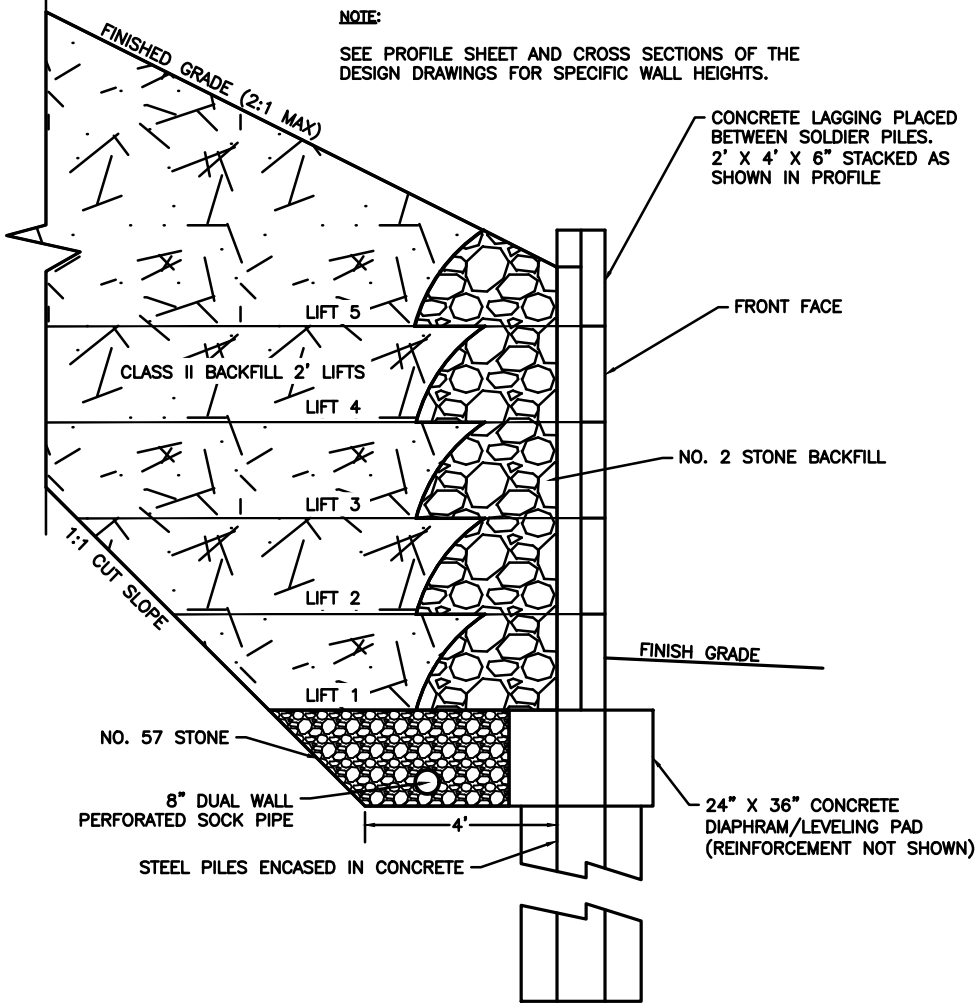

SECTION – PILE AND LAGGING WALL

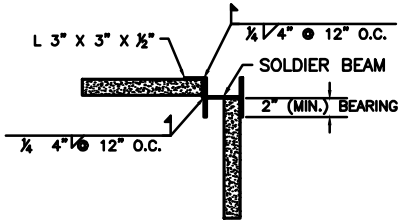

INSIDE CORNER LAGGING

NTS

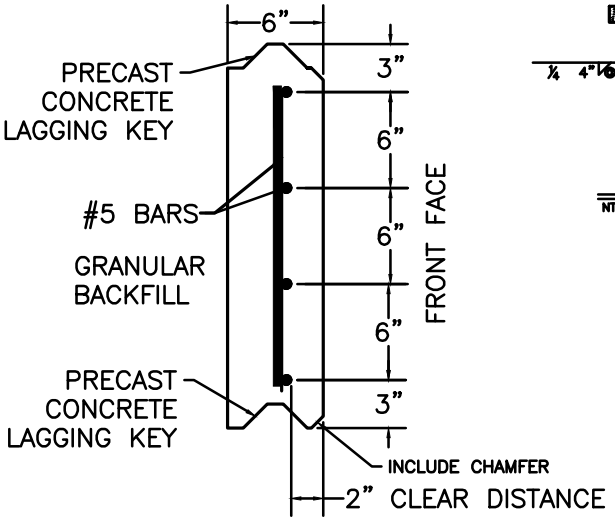

SECTION A–A

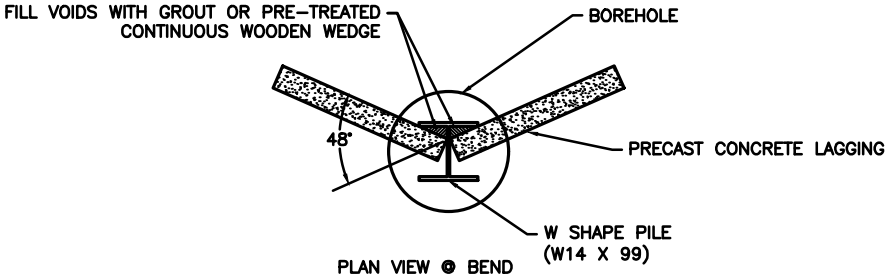

FLANGE PRESSURE DISTRIBUTION DETAIL

NTS

USE WITH AML 30–70–2

PILE AND LAGGING WALL- SHEET 1 (AML 30-70-1)

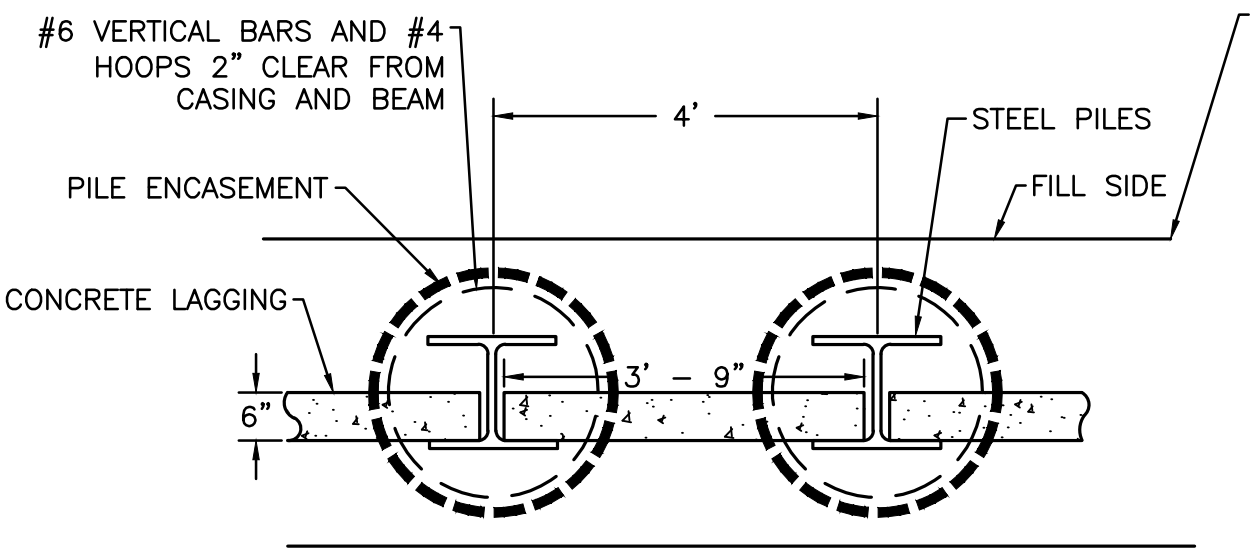

PLAN VIEW
NTS

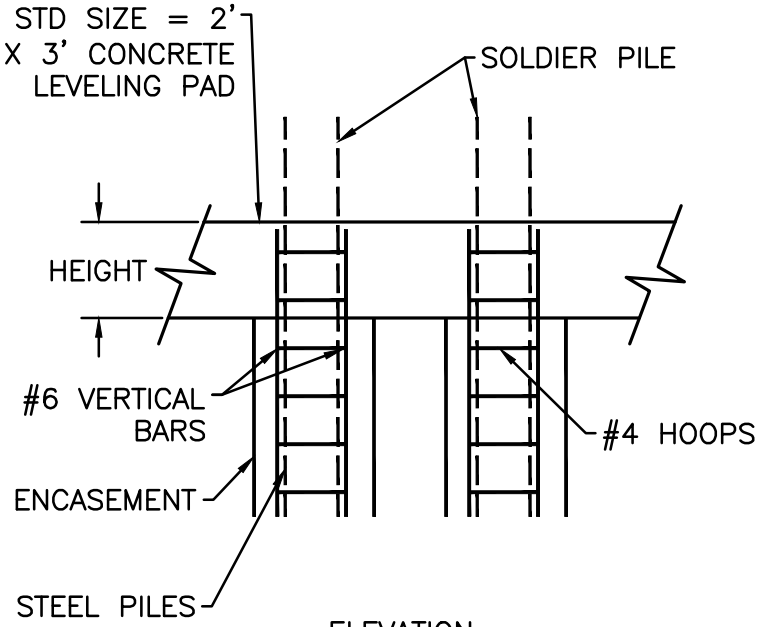

ELEVATION
NTS

HOLE DIA.	NO. OF #6 BARS
18"	0
24"	7
30"	9
36"	11

REINFORCED CAGE

NOTE:

THE CONTRACTOR SHALL NOTIFY THE ENGINEER PRIOR TO FORMING AND/OR POURING ANY PANELS SUCH THAT THE ENGINEER MAY HAVE A REPRESENTATIVE ON SITE PRIOR TO AND DURING THE POURING PROCESS.

ALL STEEL REINFORCEMENT SHALL BE ACCURATELY PLACED IN THE FORMS VERTICALLY AND HORIZONTALLY OF THE THE POSITIONS SHOWN. THE REINFORCEMENT CAGE (REAR) SHALL BE HELD FIRMLY IN PLACE BY THE USE OF CHAIRS AND WIRE TIES DURING THE VIBRATION, AGITATION, AND CURING CYCLES OF THE CONCRETE TO PREVENT MOVEMENT. WIRE TIES SHALL BE USED IN THE FABRICATION OF THE REINFORCEMENT CAGE (REBAR). ALL STEEL REINFORCEMENT SHALL BE 60 KSI. WELDING SHALL NOT BE PERMITTED.

FOR SPLICES SEE AML 30–70–3 AND "STEEL" SECTION OF TECHNICAL SPECIFICATIONS.

THE NO. 6 BARS TIE THE COLUMN AND FOOTER TOGETHER. SEE AML 30–30–2 FOR THE CONCRETE LEVELING PAD REINFORCEMENT DETAILS. STANDARD LEVELING PAD SIZE IS 2' H X 3' W.

USE WITH AML 30-70-1

PILE AND LAGGING WALL- REBAR CAGE (AML 30-70-2A)

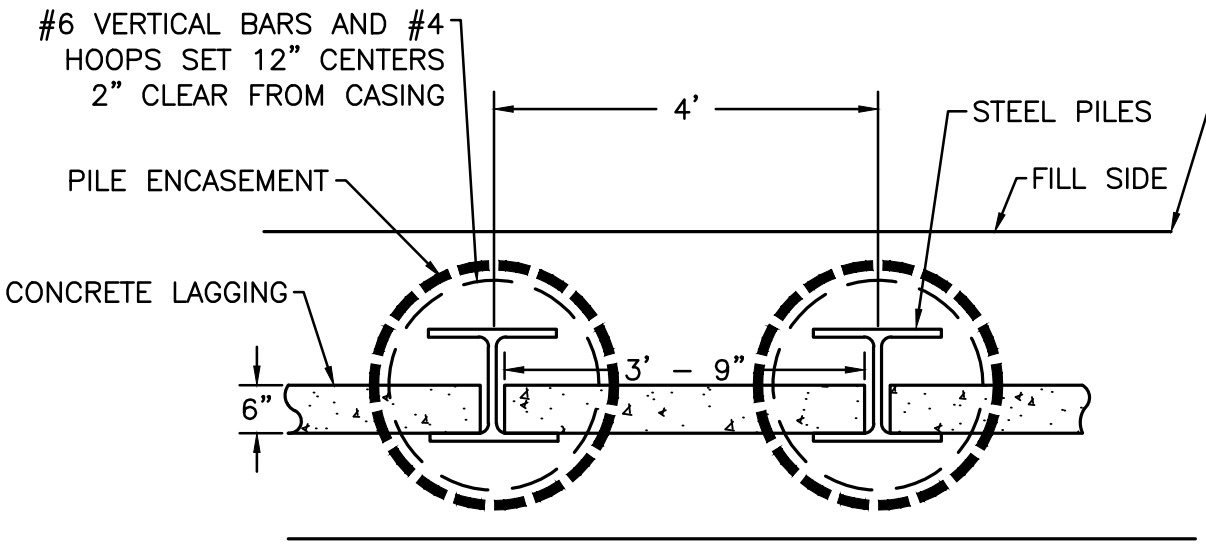

PLAN VIEW
NTS

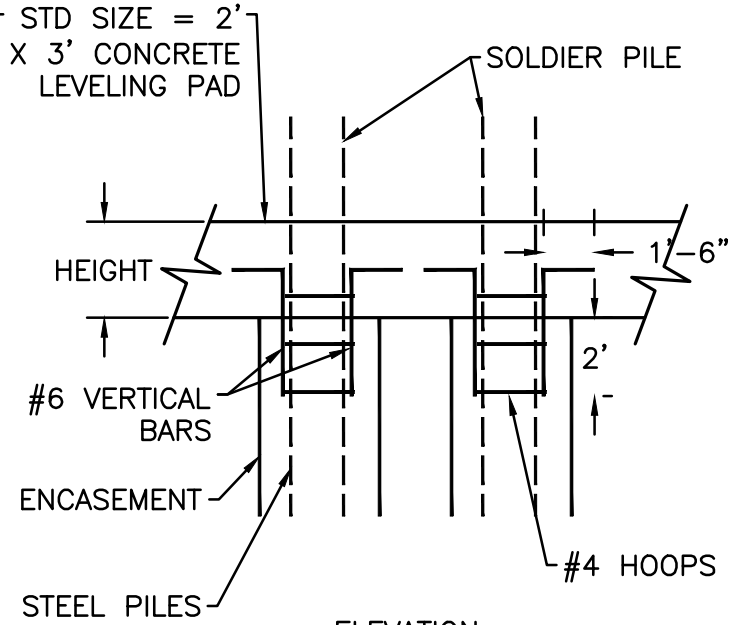

ELEVATION
NTS

HOLE DIA.	NO. OF #6 BARS
18"	0
24"	7
30"	9
36"	11

REBAR TIES

NOTE:

THE CONTRACTOR SHALL NOTIFY THE ENGINEER PRIOR TO FORMING AND/OR POURING ANY PANELS SUCH THAT THE ENGINEER MAY HAVE A REPRESENTATIVE ON SITE PRIOR TO AND DURING THE POURING PROCESS.

ALL STEEL REINFORCEMENT SHALL BE ACCURATELY PLACED IN THE FORMS VERTICALLY AND HORIZONTALLY OF THE THE POSITIONS SHOWN. THE REINFORCEMENT TIE BETWEEN THE FOOTER AND PILE ENCASEMENT SHALL BE HELD FIRMLY IN PLACE BY THE USE OF CHAIRS AND WIRE TIES DURING THE VIBRATION, AGITATION, AND CURING CYCLES OF THE CONCRETE TO PREVENT MOVEMENT. WIRE TIES SHALL BE USED IN THE FABRICATION OF THE REINFORCEMENT REBAR. ALL STEEL REINFORCEMENT SHALL BE 60 KSI. WELDING SHALL NOT BE PERMITTED.

FOR SPLICES SEE AML 30–70–3 AND "STEEL" SECTION OF TECHNICAL SPECIFICATIONS.

THE NO. 6 BARS TIE THE COLUMN AND FOOTER TOGETHER. SEE AML 30–30–2 FOR THE CONCRETE LEVELING PAD REINFORCEMENT DETAILS. STANDARD LEVELING PAD SIZE IS 2' H X 3' W.

USE WITH AML 30-70-1

PILE AND LAGGING WALL- REBAR TIES (AML 30-70-2B)

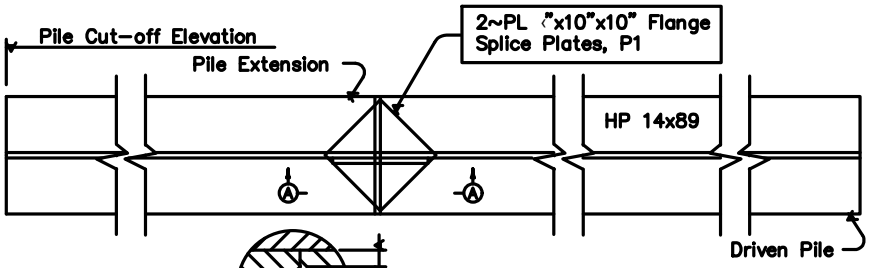

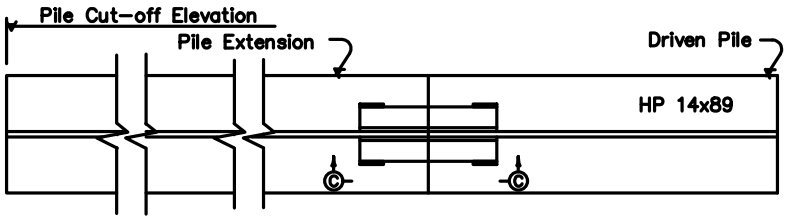

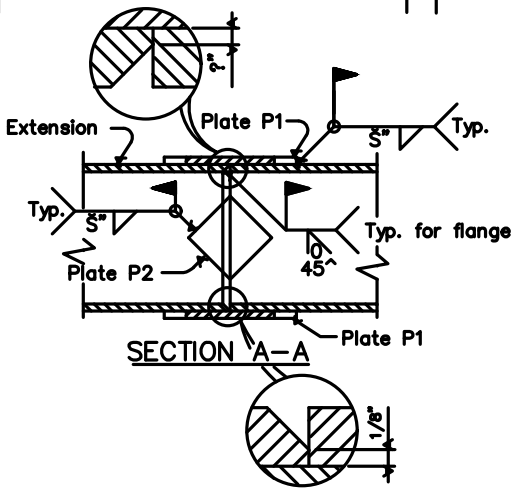

SECTION A–A

NOTE:
Bevel flanges and web of pile extension on 1:1 bevel as shown and employ conventional butt weld.

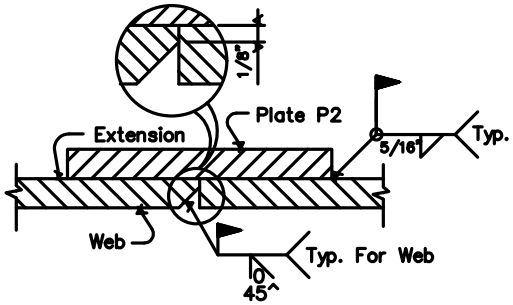

SECTION B–B
(Flange Not Shown)

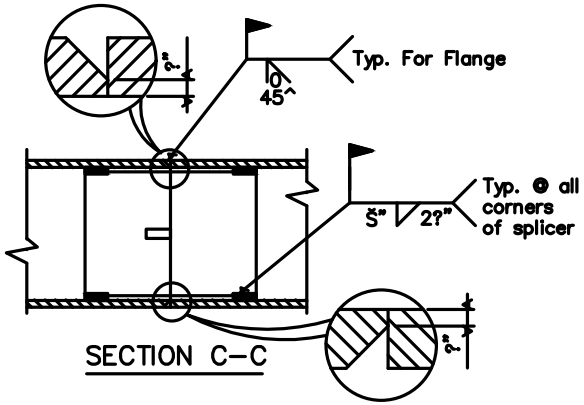

SECTION C–C

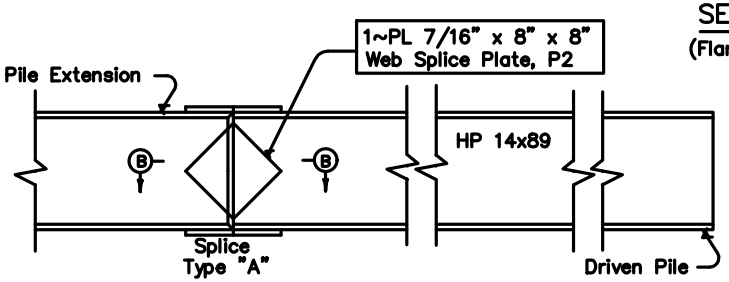

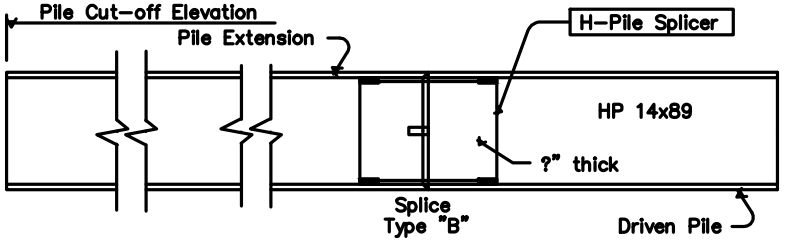

GENERAL NOTES

FIELD WELDS: ENSURE FIELD WELDING MATERIAL AND WORKMANSHIP FOR ALL PILINGS CONFORMS TO THE CURRENT JOINT SPECIFICATIONS ANSI/AASHTO/AWS D1.5 BRIDGE WELDING CODE. SPLICE PILES AS INDICATED ABOVE ONLY WHEN DRIVEN BELOW CUT-OFF ELEVATION.

SPLICE PLATES: ENSURE ALL PILE SPLICING OPTIONS CONFORM TO ASTM A36, CURRENT SPECIFICATIONS. IN LIEU OF SPLICE OPTION 'A' OR SPLICE OPTION 'B', SPLICE PLATES MAY BE FLAME CUT FROM HP OR W SECTIONS. IF FLANGE SECTIONS ARE USED, THE PORTION CUT AT THE WEB MUST BE TURNED OUTSIDE IN ORDER TO OBTAIN A TIGHT FIT. GRIND THE EDGES SMOOTH PRIOR TO WELDING.

SPLICE OPTION 'B': THE PILE SPLICER SHOWN IN THE DETAILS FOR SPLICE OPTION 'B' MAY BE CHAMPION H-PILE SPLICER, MODEL HP 30000, OR AN APPROVED EQUAL. ENSURE THE SPLICER IS IN ACCORDANCE TO THE MANUFACTURER'S RECOMMENDATIONS AND SUBJECT TO THE ENGINEER'S APPROVAL.

NOTE:

THIS DETAIL SHOWS HP 14X89 AS A TYPICAL SHAPE.
CHECK DESIGN PLANS FOR ACTUAL SHAPE AND SIZE USED.

STEEL PILE- SPLICING DETAILS (AML 30-70-3)

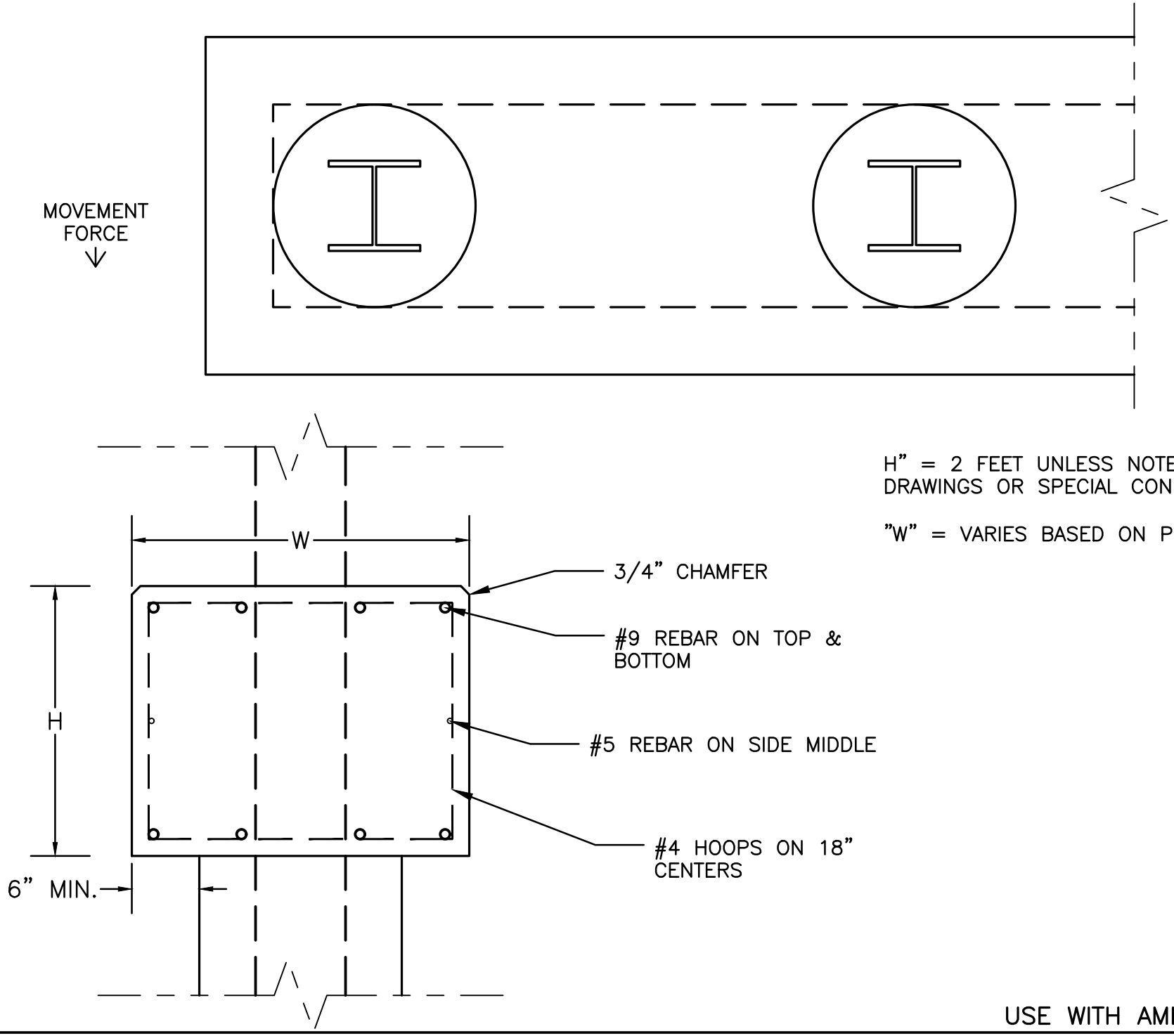

H" = 2 FEET UNLESS NOTED OTHERWISE ON DRAWINGS OR SPECIAL CONDITIONS.

"W" = VARIES BASED ON PILE SIZE + 12"

USE WITH AML 30–70–1 & 2

PILE & LAGGING WALL- REINFORCED CONCRETE CAP (AML 30-70-4)

KY DAML 7–2017

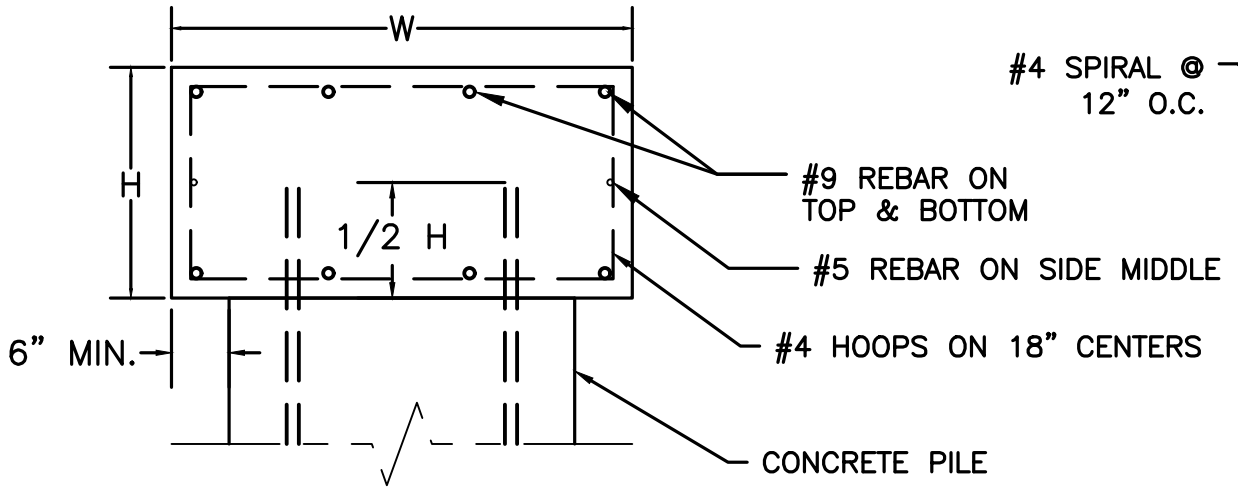

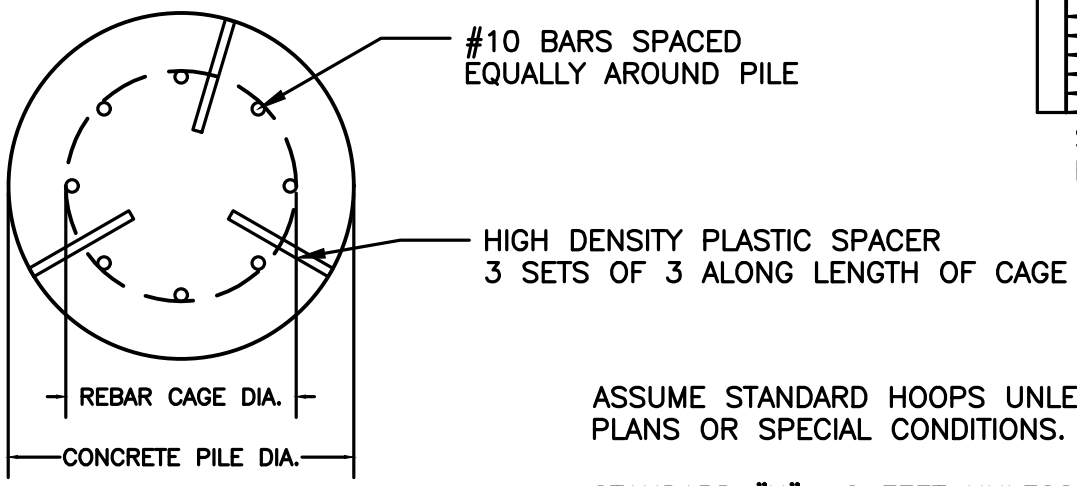

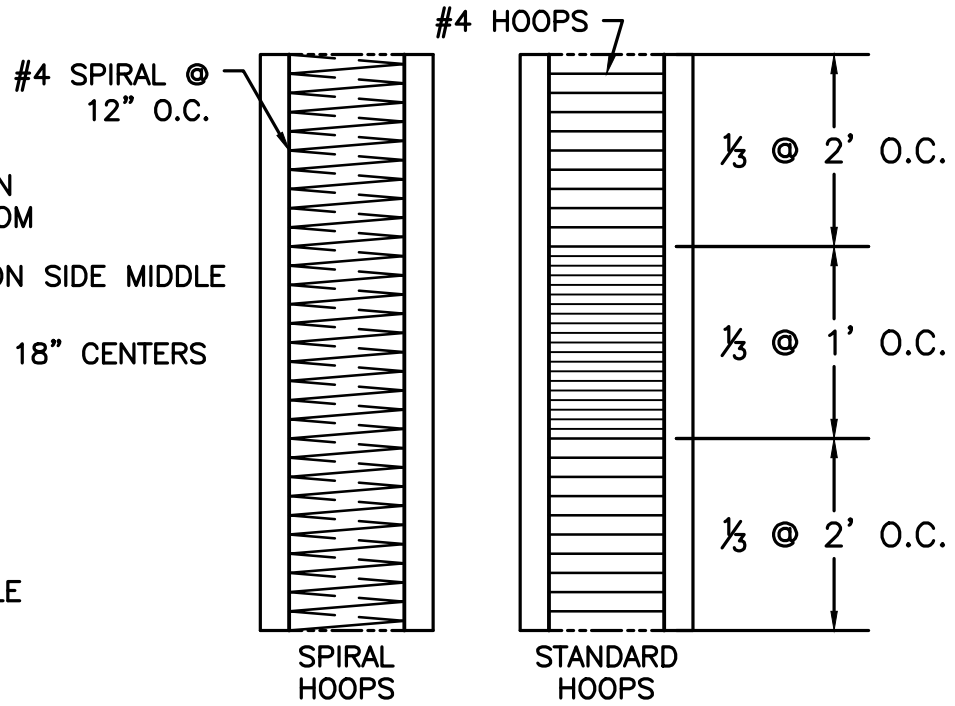

ASSUME STANDARD HOOPS UNLESS SPECIFIED OTHERWISE ON DESIGN PLANS OR SPECIAL CONDITIONS.

STANDARD "H"= 2 FEET UNLESS NOTED OTHERWISE ON DRAWINGS OR SPECIAL CONDITIONS. "W" = PILE DIA. + 6" OVERHANG ON EACH SIDE.

	REINFORCED CONCRETE CAP		CONCRETE PILE				SPACER SIZE
	STEEL (lbs)	CONCRETE (cyd)	STEEL (lbs)		CONCRETE (cyd)	NO. OF #10 BARS	
			w/ Spiral Hoops	w/ Standard Hoops			
24" PILE	33.19	0.22	2.8	34.32	0.116	7	6"
30" PILE	33.59	0.26	5.2	44.32	0.182	9	6"
36" PILE	34.09	0.30	6.4	52.93	0.262	11	9"
	PER LINEAR FOOT						

REINFORCED CONCRETE PILES & CAP (AML 30-80-1)

KY DAML 2-2013

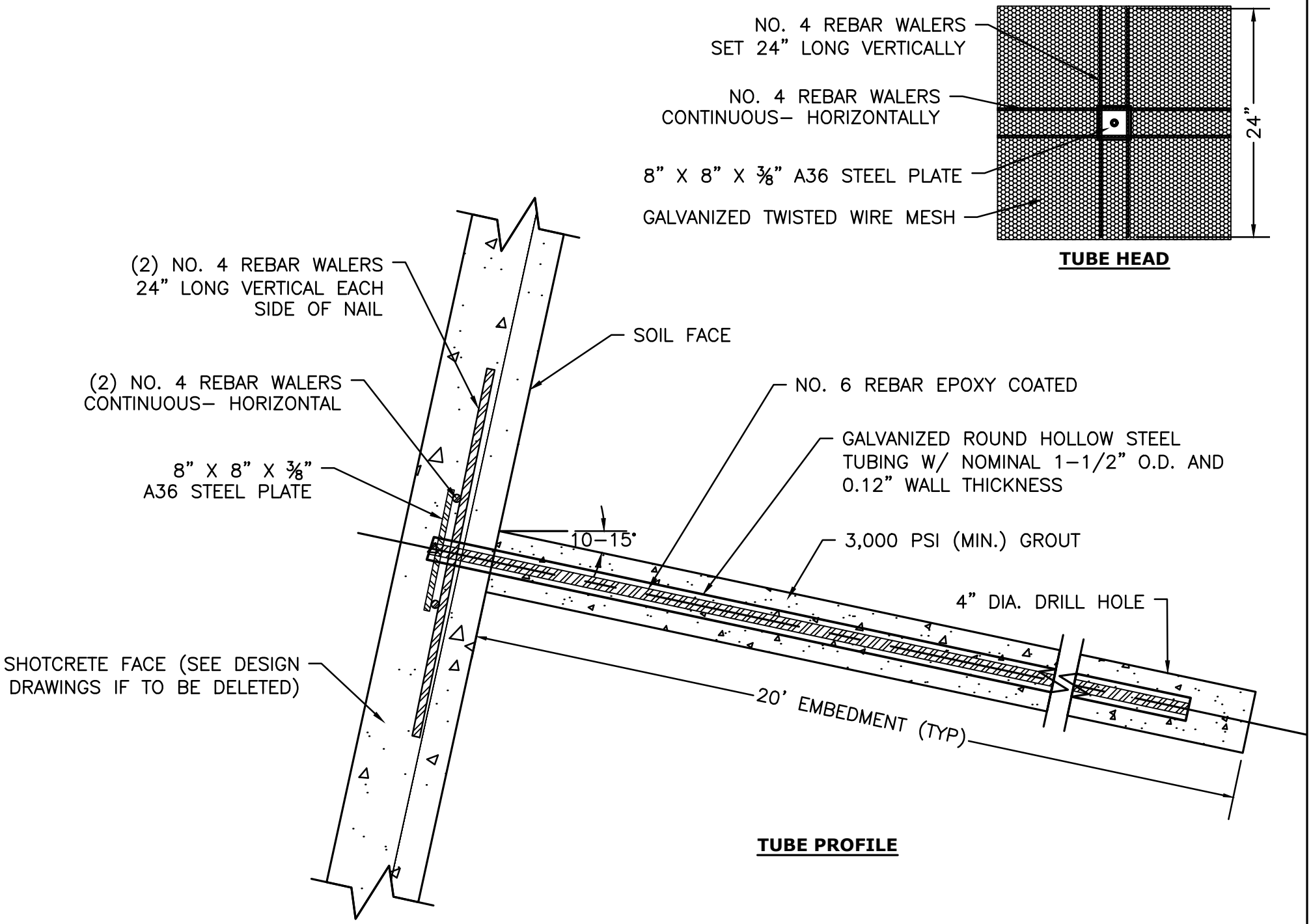

SOIL NAILS- SHEET 1 (AML 30-90-1)

KY DAML 4–2014

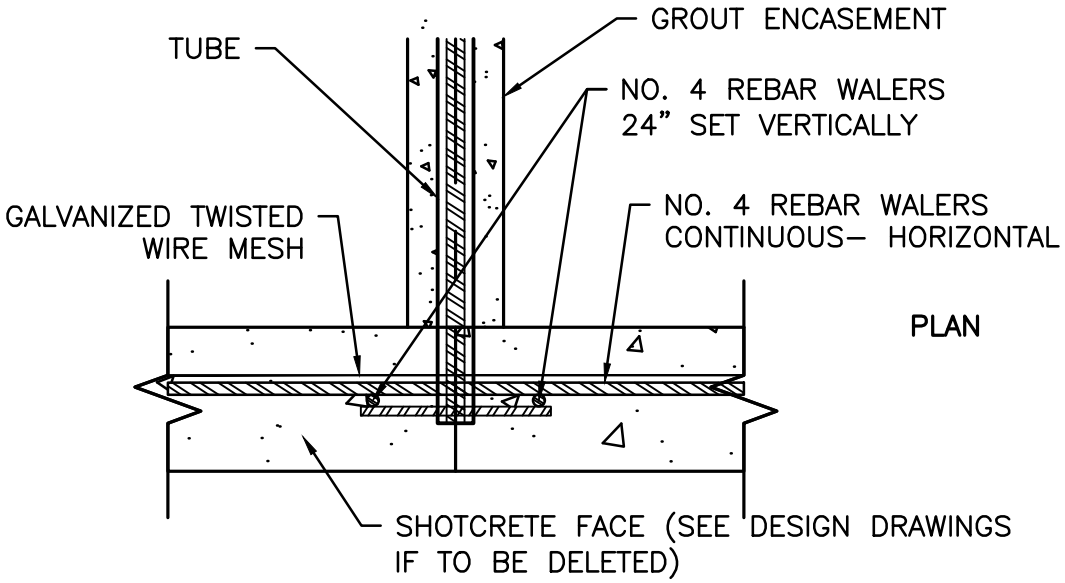

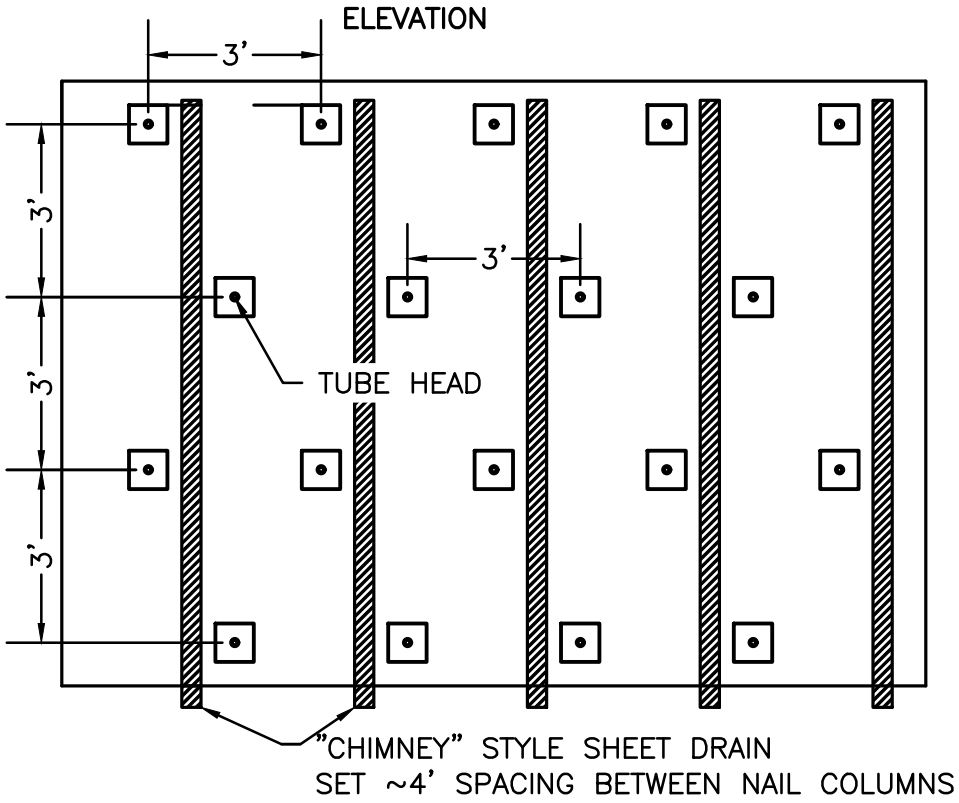

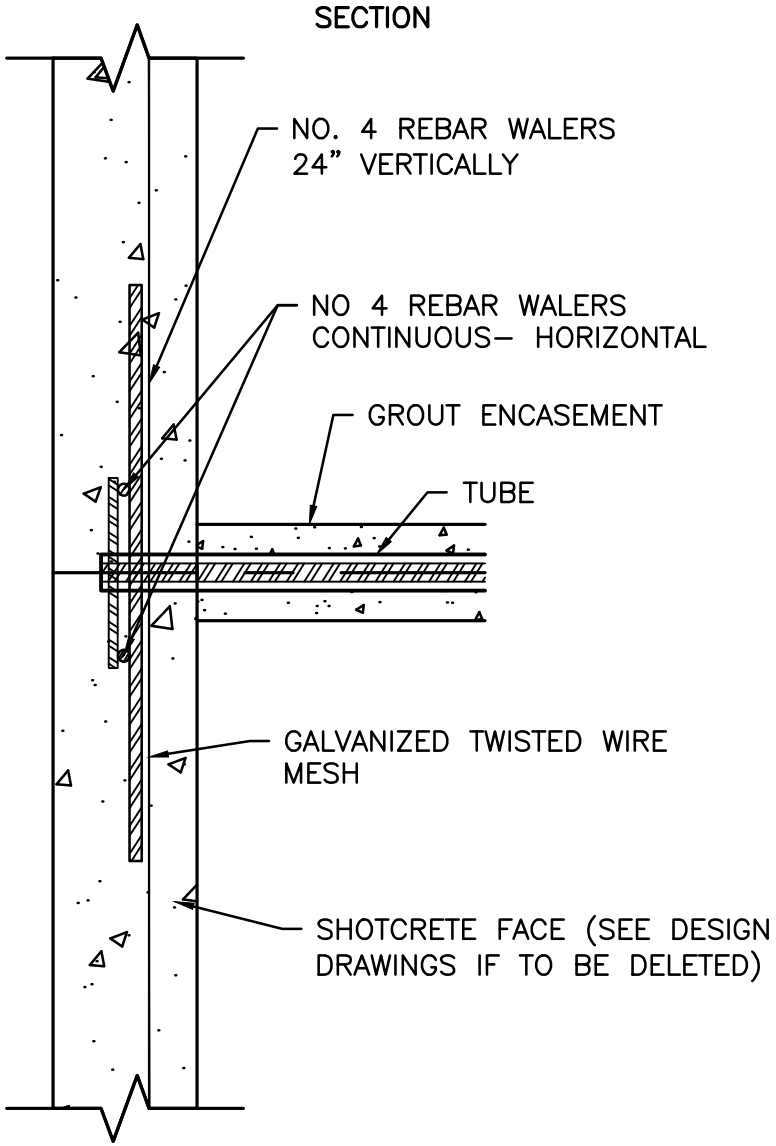

SOIL NAILS- SHEET 2 (AML 30-90-2)

KY DAML 4–2014

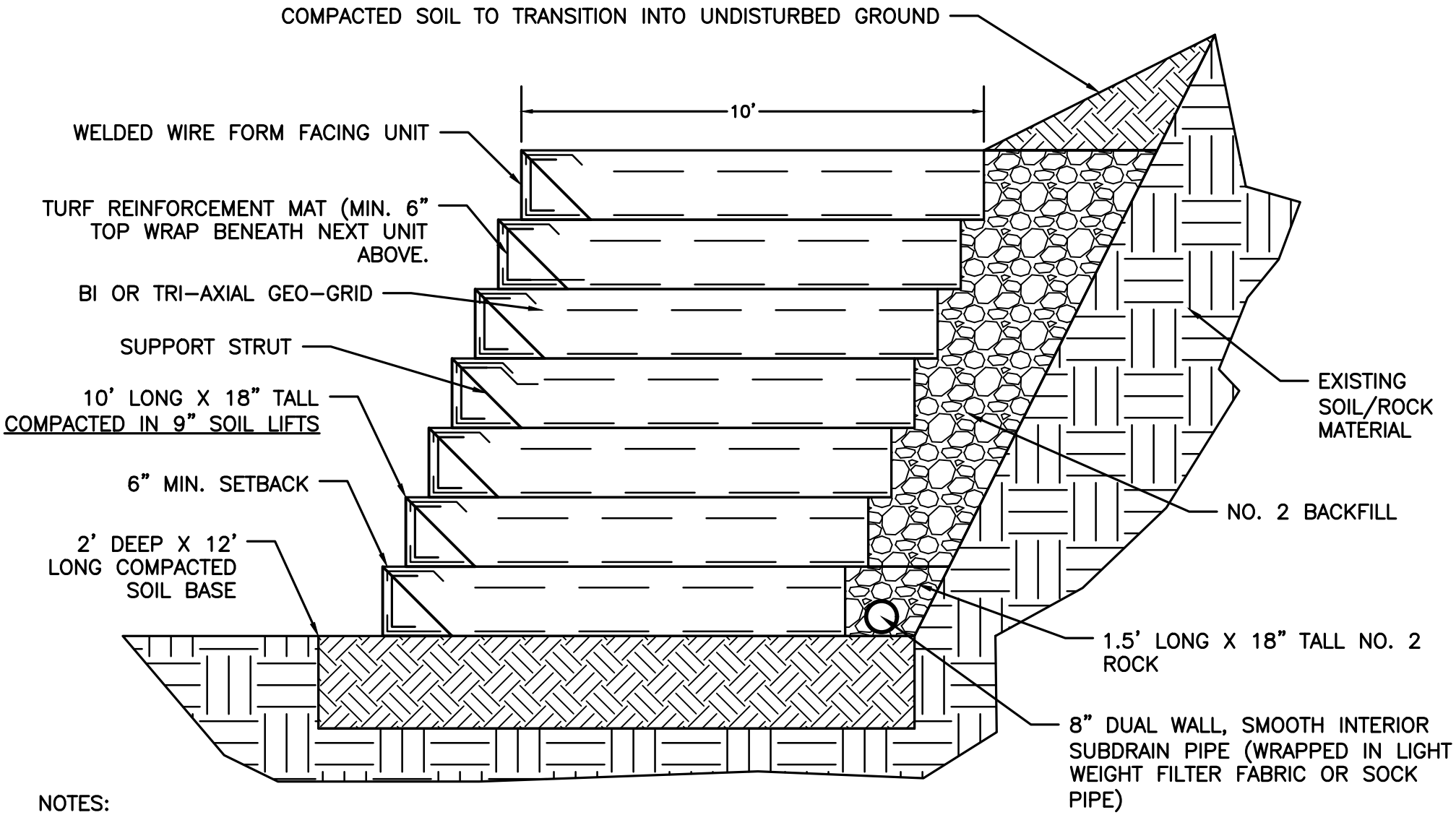

NOTES:

1. FIELD CONDITIONS WILL DICTATE FINAL BACKSLOPE, BUT SHOULD NOT BE MORE THAN 1:2 CUT AND REMAIN STABLE DURING CONSTRUCTION.

2. ALL SOIL RECEIVES 95% PROCTER COMPACTION.

USE WITH AML 30-10-2

WELDED WIRE REINFORCED SOIL WALL (AML 30-10-1)

KY DAML 4-2014

TYPICAL WELDED WIRE FACING UNITS

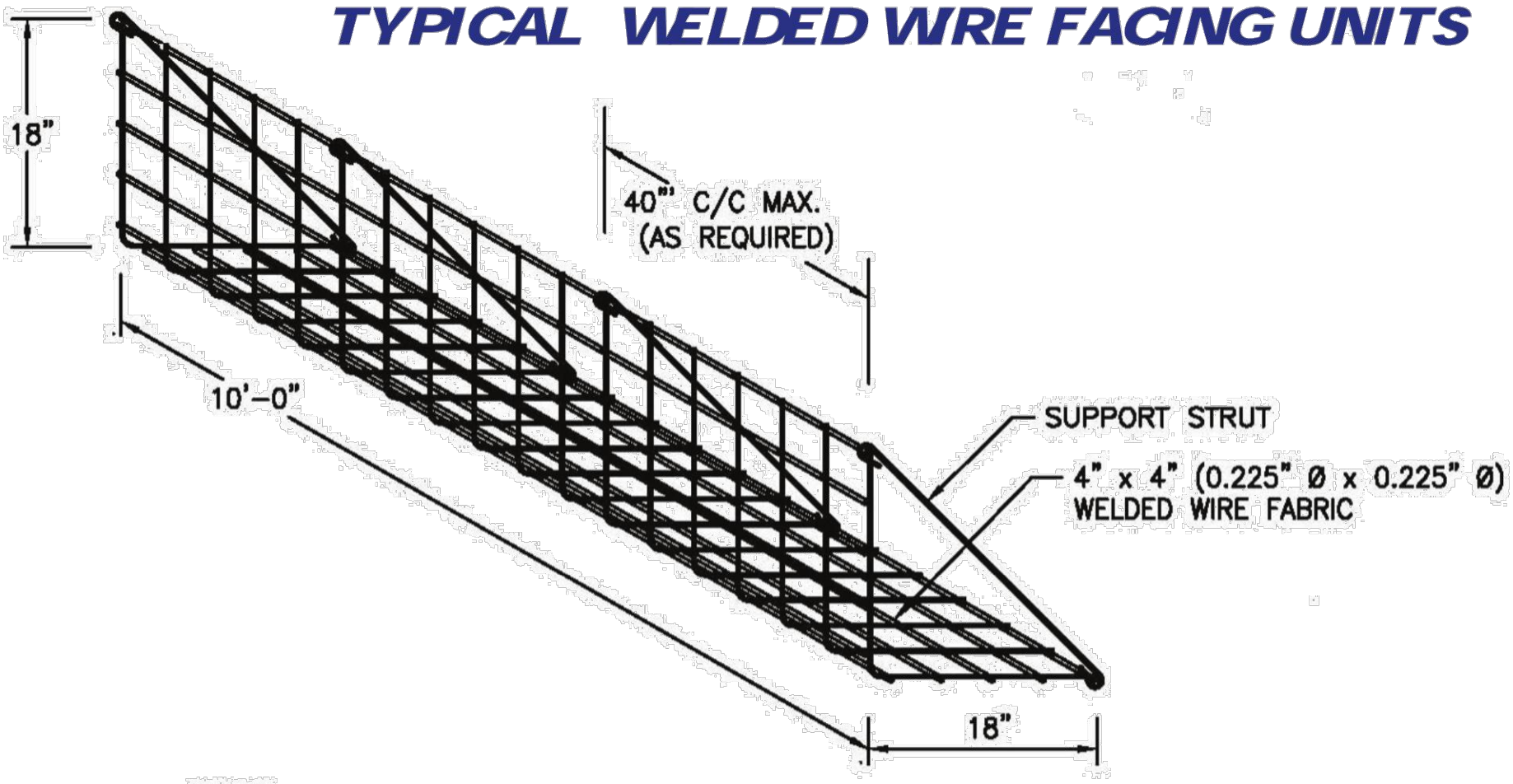

NOTES:

1. FACING TO CONSIST OF PREFABRICATED WWF 4" x 4" (0.225" Ø x 0.225" Ø) FORMS.
2. ALL FORMS AND STRUTS WILL BE FABRICATED WITH BLACK WIRE.
3. OVERALL LENGTH OF WIRE FORMS IS 10'-0". EFFECTIVE CONSTRUCTED WIDTH IS 9'-8" WITH 4" OVER LAPPING AT ENDS.

WELDED-WIRE REINFORCED SOIL WALL- FORM FACING UNITS (AML 30-10-2)

KY DAML 1-2013

1. REMOVE LOOSE MATERIAL FROM HIGHWALL PRIOR TO WALL CONSTRUCTION.
2. CONSTRUCT BASE ON A CONCRETE FOOTER UNLESS DIRECTED OTHERWISE BY ENGINEER.
3. SEE DESIGN DRAWINGS IF CHAIN–LINK FENCE (NOT SHOWN) IS REQUIRED.
4. IF DESIGN HEIGHT IS TO EXCEED 8' THEN WALL MUST BE SPECIALLY DESIGNED.

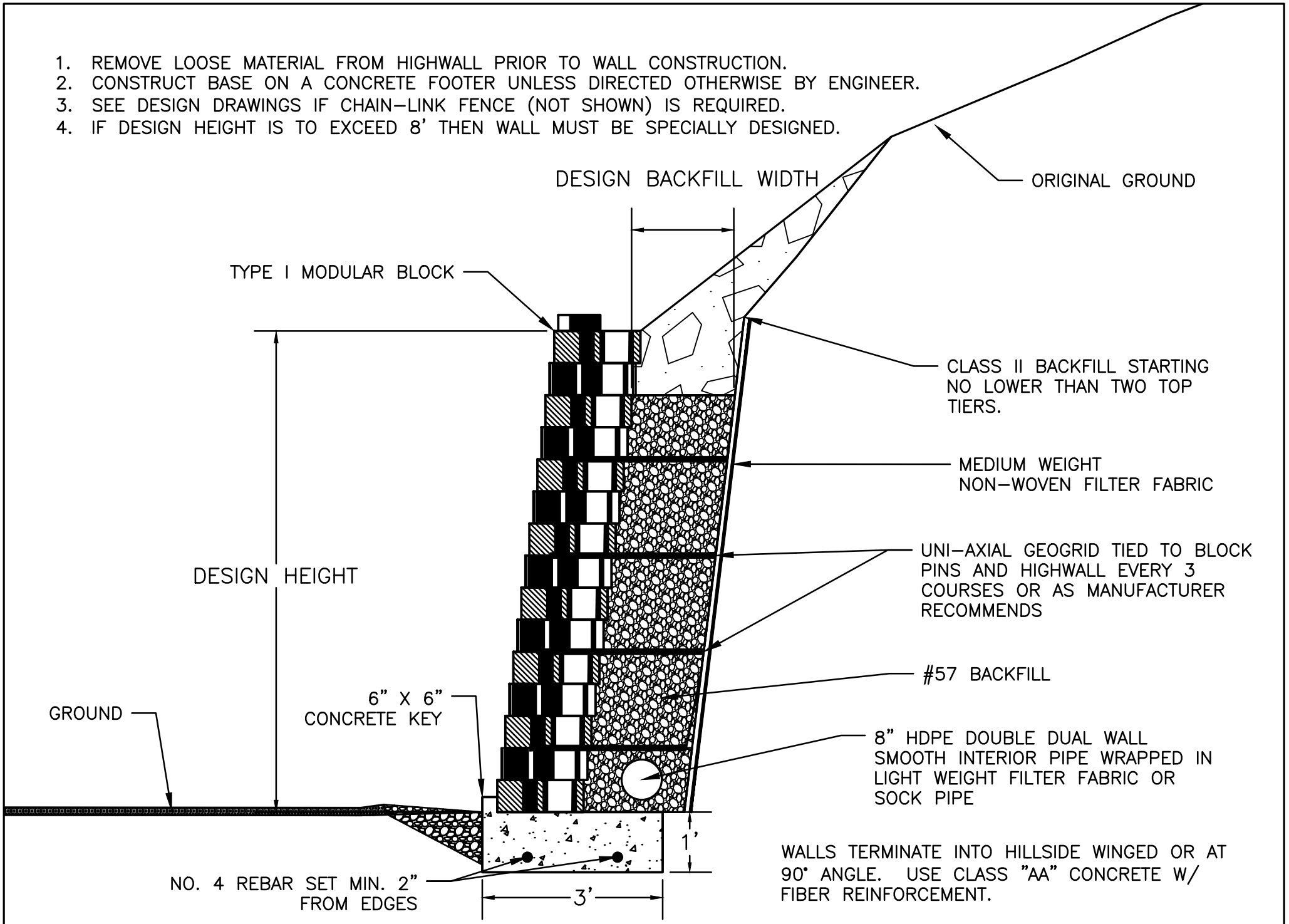

NON-REINFORCED BLOCK WALL- TYPE I (AML 30-20-1)

KY DAML 10–2013

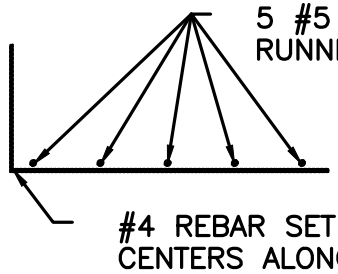

FOOTER REINFORCEMENT DETAIL
NTS

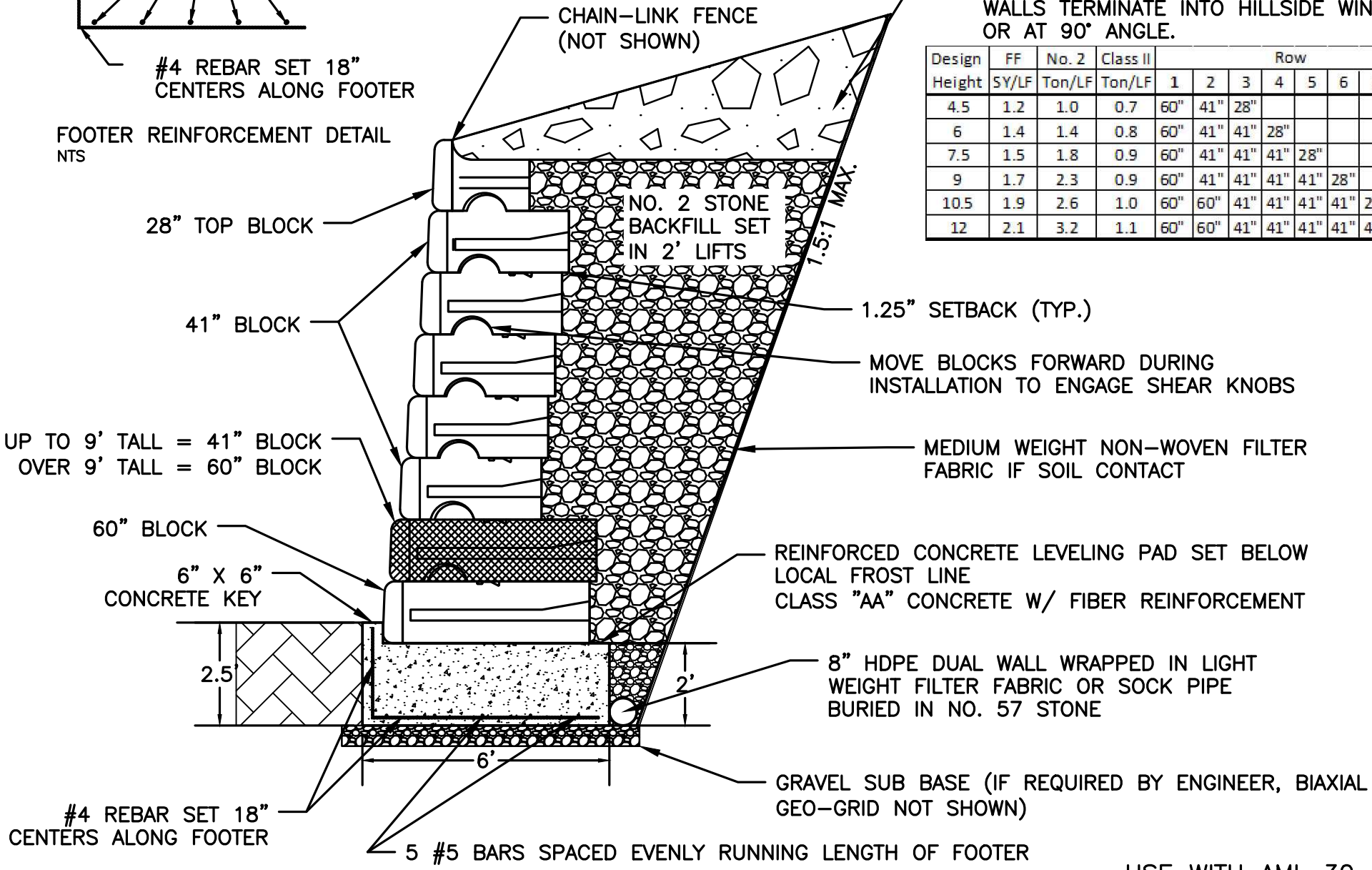

WALLS TERMINATE INTO HILLSIDE WINGED OR AT 90° ANGLE.

Design	FF	No. 2	Class II	Row							
Height	SY/LF	Ton/LF	Ton/LF	1	2	3	4	5	6	7	8
4.5	1.2	1.0	0.7	60"	41"	28"					
6	1.4	1.4	0.8	60"	41"	41"	28"				
7.5	1.5	1.8	0.9	60"	41"	41"	41"	28"			
9	1.7	2.3	0.9	60"	41"	41"	41"	41"	28"		
10.5	1.9	2.6	1.0	60"	60"	41"	41"	41"	41"	28"	
12	2.1	3.2	1.1	60"	60"	41"	41"	41"	41"	41"	28"

USE WITH AML 30-20-3

NON-REINFORCED BLOCK WALL- TYPE II (AML 30-20-2)

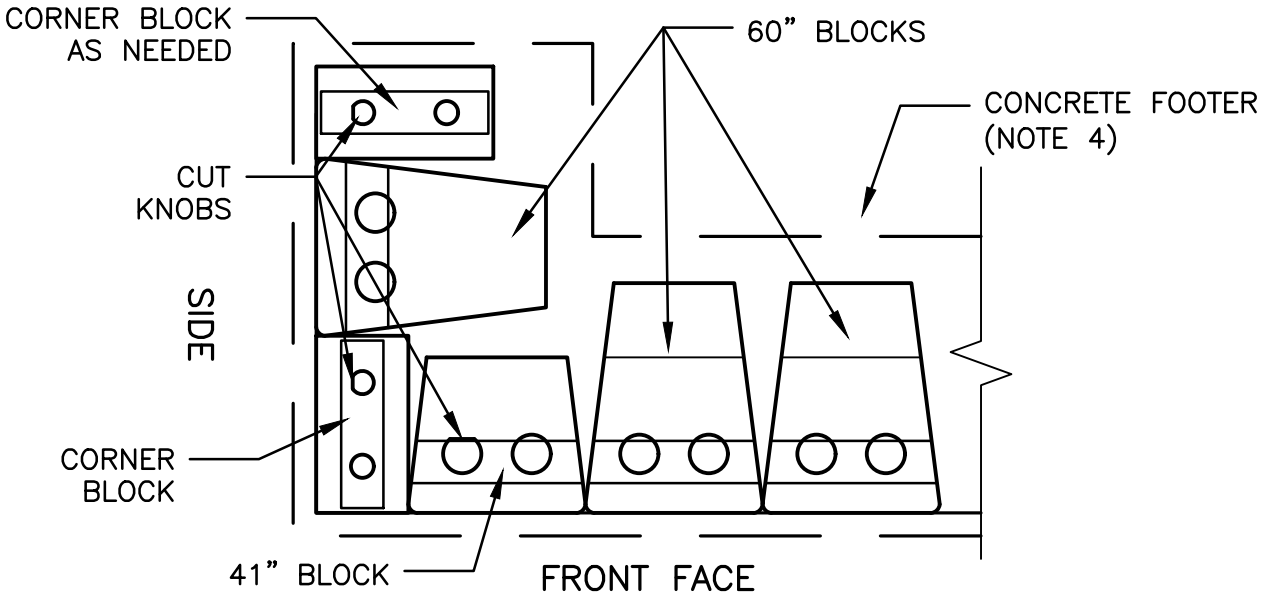

ODD NUMBER ROWS
(INCLUDES BASE)

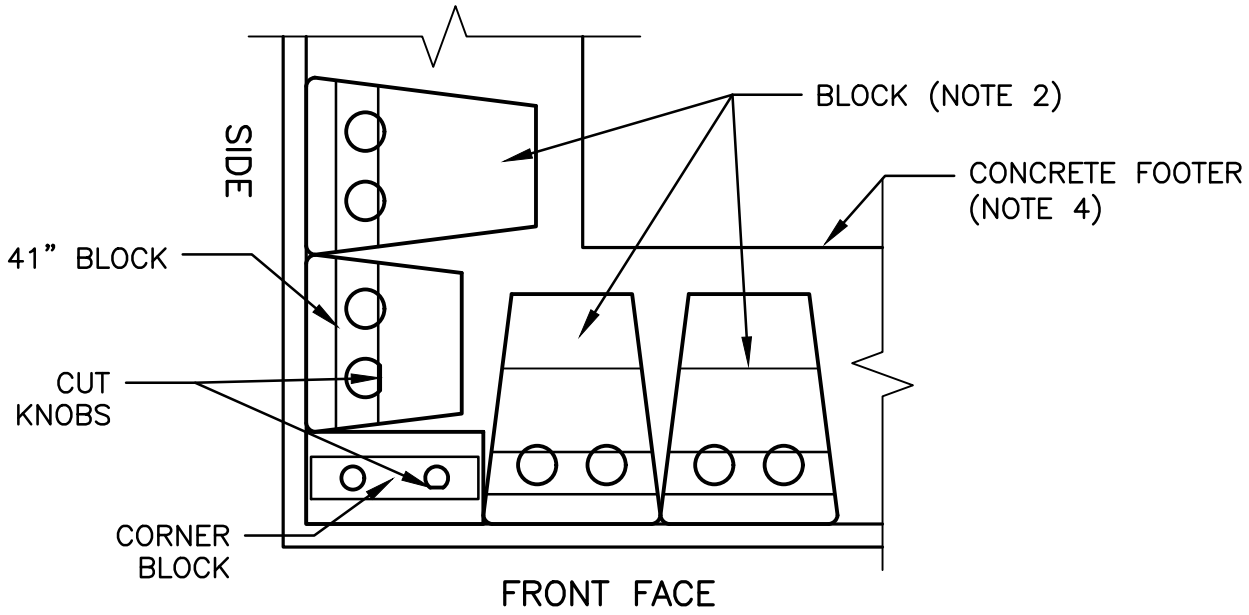

EVEN NUMBER ROWS

1. CORNER BLOCKS ARE 46" X 24" W/ 6" KNOBS. BASE COURSE HAS STRAIGHT BOTTOM.
2. SEE 30–20–2 FOR BLOCK SIZE PER ROW HEIGHT.
3. CUT EDGE OF 10" KNOBS ON 41" BLOCKS AND 6" KNOB ON CORNER BLOCK W/ CHOP SAW TO PROVIDE CLEARANCE FOR BLOCKS IN THE NEXT ROW.
4. LAP LONGITUDINAL BARS IN CONCRETE FOOTER AT CORNERS.

NON-REINFORCED BLOCK WALL- TYPE II 90° OUTSIDE CORNER (AML 30-20-3)

USE WITH AML 30–20–2

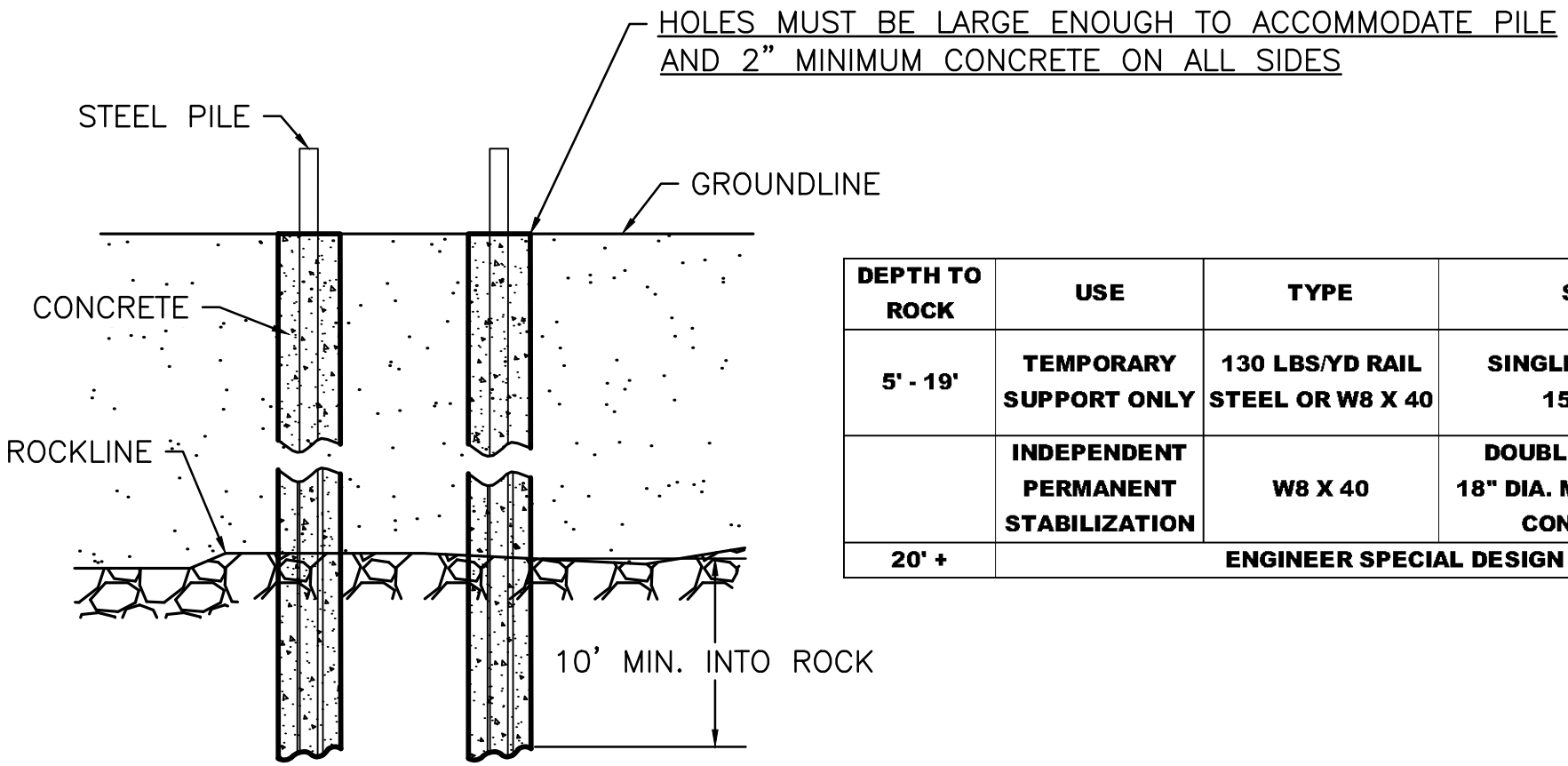

DEPTH TO ROCK	USE	TYPE	SPACING
5' - 19'	TEMPORARY SUPPORT ONLY	130 LBS/YD RAIL STEEL OR W8 X 40	SINGLE ROW, 36" OC, 15" DIA. MIN
	INDEPENDENT PERMANENT STABILIZATION	W8 X 40	DOUBLE ROW, 48" OC, 18" DIA. MIN, REINFORCED CONCRETE CAP
20' +	ENGINEER SPECIAL DESIGN		

NOTES:

1. BEAMS SHALL BE ORIENTED WITH FLANGES PERPENDICULAR TO POSSIBLE SLIDE MOVEMENT.
2. BEAMS SHALL BE ENCASED WITH CONCRETE A MINIMUM 2" CONCRETE ON ALL SIDES FOR THE ENTIRE DEPTH OF THE HOLE.
3. BEAMS SHALL BE STRAIGHT AND STRUCTURALLY SOUND. ENGINEER MUST AUTHORIZE SPLICING. NO SPLICING SHALL BE ALLOWED IN RAILROAD RAILS.
4. THE ENGINEER MAY SPECIFY THE SIZE OR TYPE OF STEEL (INCLUDING USE OF RAILROAD STEEL RAILS) ON DRAWINGS, IN THE SPECIAL CONDITIONS, OR IN WRITING DURING CONSTRUCTION.

SEE AML 30–30–2 FOR CAP DETAILS

STEEL PILES- TEMPORARY AND INDEPENDENT SUPPORT (AML 30-30-1)

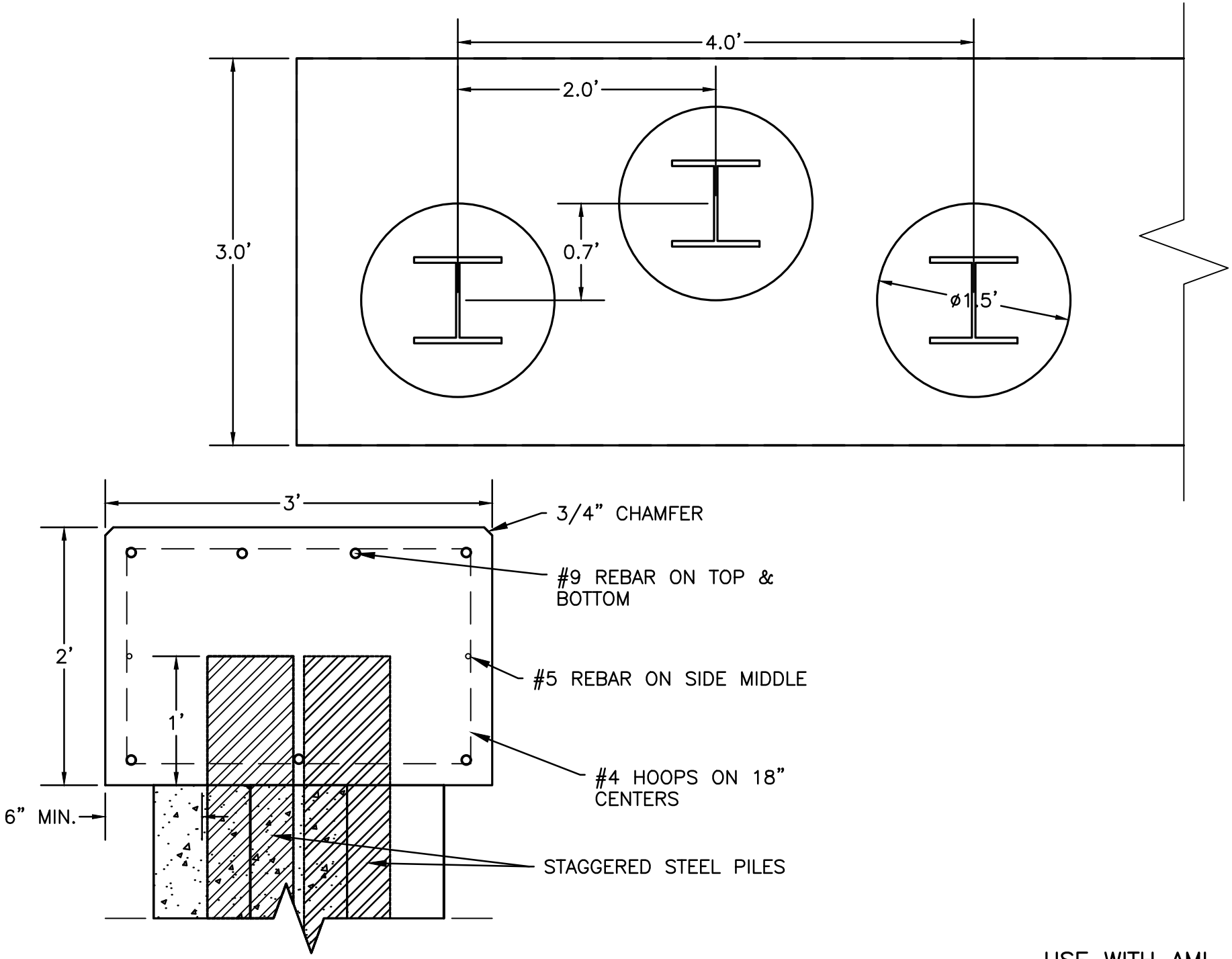

USE WITH AML 30–30–1

STEEL PILES WITH REINFORCED CONCRETE CAP (AML 30-30-2)

KY DAML 8–2017

1. BURY ONLY 1/2 BASKET FOR WALLS SHORTER THAN 9 FT.
2. GABION WALLS MUST BE CONSTRUCTED IN A STAGGER PATTERN AS SHOWN. THIS MUST BE DONE FOR BOTH DIRECTIONS OF THE WALL.

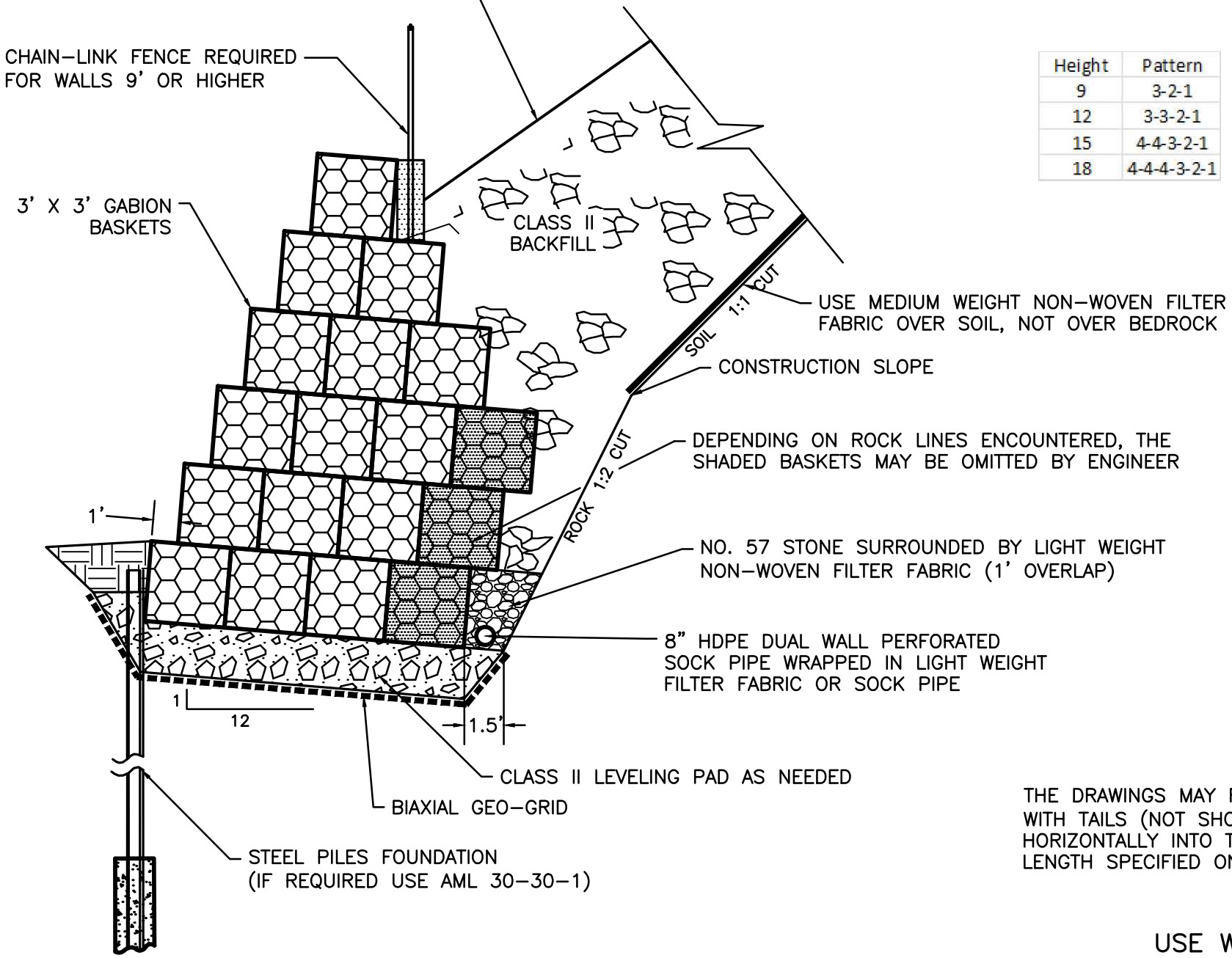

Height	Pattern
9	3-2-1
12	3-3-2-1
15	4-4-3-2-1
18	4-4-4-3-2-1

THE DRAWINGS MAY REQUIRE GABIONS WITH TAILS (NOT SHOWN). TAILS EXTEND HORIZONTALLY INTO THE BACKFILL AT LENGTH SPECIFIED ON DRAWINGS.

USE WITH AML 70–30–1

GABION RETAINING WALL (AML 30-40-1)

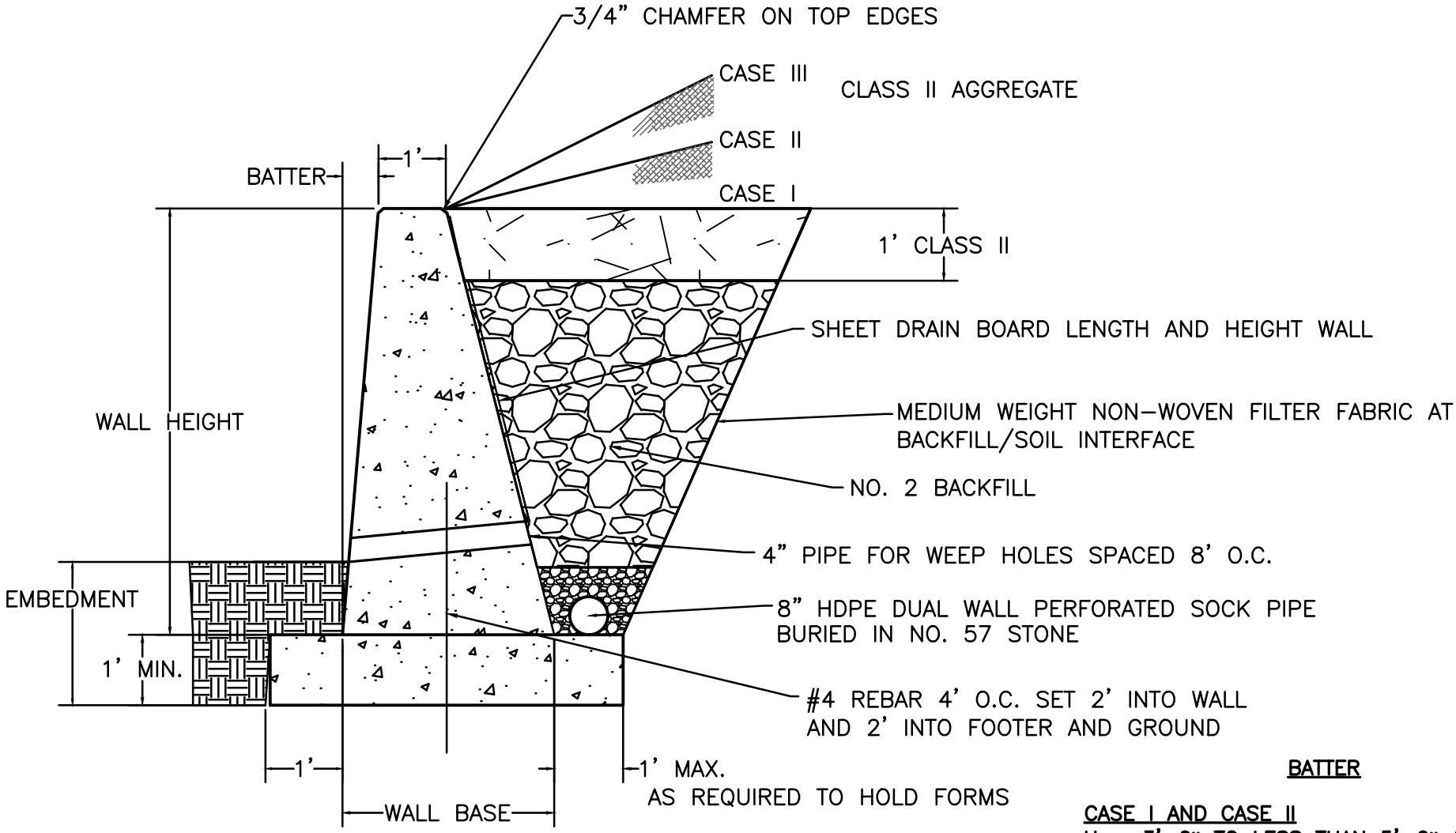

EMBEDMENT

1. MINIMUM EMBEDMENT VALUE FOR FIRM EARTH IS 2'-0".
2. CASE III REQUIRES AN EMBEDMENT OF 1/4 H FOR A WALL OVER 8'.
3. FOR FOOTER SET ON ROCK 1/2 FOOTER DEPTH WILL BE SET IN ROCK.

WALLS TERMINATE INTO HILLSIDE WINGED OR AT 90° ANGLE

BATTER

CASE I AND CASE II
H = 3'-0" TO LESS THAN 5'-0" (VERTICAL)
H = 5'-0" TO LESS THAN 10'-0" (12:1)
H = 10'-0" TO LESS THAN 12'-0" (6:1)

CASE III
H = 3'-0" TO LESS THAN 5'-0" (12:1)
H = 5'-0" TO LESS THAN 12'-0" (6:1)

USE WITH AML 30-50-2

CONCRETE GRAVITY WALL (AML 30-50-1)

THE RETAINING WALL DEPICTED ON THIS DRAWING SHALL BE USED WHEN THE HEIGHT ("H" DIMENSION) OF THE WALL IS 12'–0" OR LESS PROVIDED THE FILL COMPLIES WITH THE FOLLOWING CONDITIONS:

CASE I: WALL BACKFILL SLOPES DOWN, IS LEVEL, OR SLOPES UP FROM WALL AT 20:1 OR FLATTER SLOPE ALLOWS FOR BACKFILL WHICH WOULD BE LEVEL EXCEPT FOR THE SLOPE REQUIRED TO FACILITATE PROPER DRAINAGE.

CASE II: BACKFILL SLOPES UP STEEPER THAN 20:1, BUT NOT STEEPER THAN 4:1.

CASE III: BACKFILL SLOPES UP STEEPER THAN 4:1, BUT NOT STEEPER THAN 2:1. WHEN "H" IS GREATER THAN 8' (6' FRONT FACE), INCREASE THE EMBEDMENT DEPTH TO 1/4 "H."

SPECIAL DESIGNS SHALL BE REQUIRED WHEN THE FOLLOWING CONDITIONS EXIST:

A. WALL HEIGHT IS GREATER THAN 12'0"
B. WALL IS SURCHARGED WITH DEAD LOAD FILL SLOPES STEEPER THAN 2:1
C. WALL IS SURCHARGED WITH A LIVE LOAD, WITHOUT THE LIMITS OF A 1:1 SLOPE EXTENDING FROM THE BASE OF THE WALL.

AREAS AND VOLUMES HAVE BEEN COMPUTED WITHOUT REDUCTION FOR BEVELED EDGES OR PIPE DRAINS. WHEN A RETAINING WALL VARIES IN HEIGHT, THE PRISMOIDAL FORMULA SHALL BE USED IN COMPUTING VOLUMES. THE FOOTER IS NOT INCLUDED IN THE TABULATED VOLUMES.

1. PLACE BI–AXIAL GEO–GRID UNDER THE BASE OF THE WALL UNLESS ON BEDROCK.
2. ALL CONCRETE SHALL BE 4,000 PSI CONCRETE WITH FIBER REINFORCEMENT
3. THE BASE OF THE FOOTER MUST BE SET AT 24" DEEP (MIN.) OR BELOW LOCAL FROSTLINE (WHICHEVER IS DEEPER)
4. RAISE THE MIDDLE PORTION OF THE SUBDRAIN ~2" TO PUT A SLIGHT GRADE ON PIPE

WALL HEIGHT (EXCLUDING FOOTER)	WALL BASE (EXCLUDING FOOTER)	FOOTER CONCRETE	WALL CONCRETE
		CY/LF	CY/LF
CASE I OR II OR III			
3'–0"	1'–6"	0.13	0.14
3'–6"	1'–9"	0.14	0.18
4'–0"	2'–0"	0.15	0.23
4'–6"	2'–3"	0.16	0.27
5'–0"	2'–6"	0.17	0.32
5'–6"	2'–9"	0.18	0.40
6'–0"	3'–0"	0.19	0.48
6'–6"	3'–3"	0.19	0.55
7'–0"	3'–6"	0.20	0.63
7'–6"	3'–9"	0.21	0.71
8'–0"	4'–0"	0.22	0.78
8'–6"	4'–3"	0.23	0.86
9'–0"	4'–6"	0.24	0.94
9'–6"	4'–9"	0.25	1.01
CASE I			
10'–0"	5'–0"	0.26	1.11
10'–6"	5'–3"	0.27	1.22
11'–0"	5'–6"	0.28	1.33
11'–6"	5'–9"	0.29	1.44
12'–0"	6'–0"	0.30	1.56
CASE II OR III			
10'–0"	6'–0"	0.30	1.3
10'–6"	6'–3"	0.31	1.42
11'–0"	6'–6"	0.31	1.54
11'–6"	6'–9"	0.32	1.66
12'–0"	7'–0"	0.33	1.78

USE WITH AML 30–50–1

CONCRETE GRAVITY WALL- NOTES & QUANTITIES (AML 30-50-2)

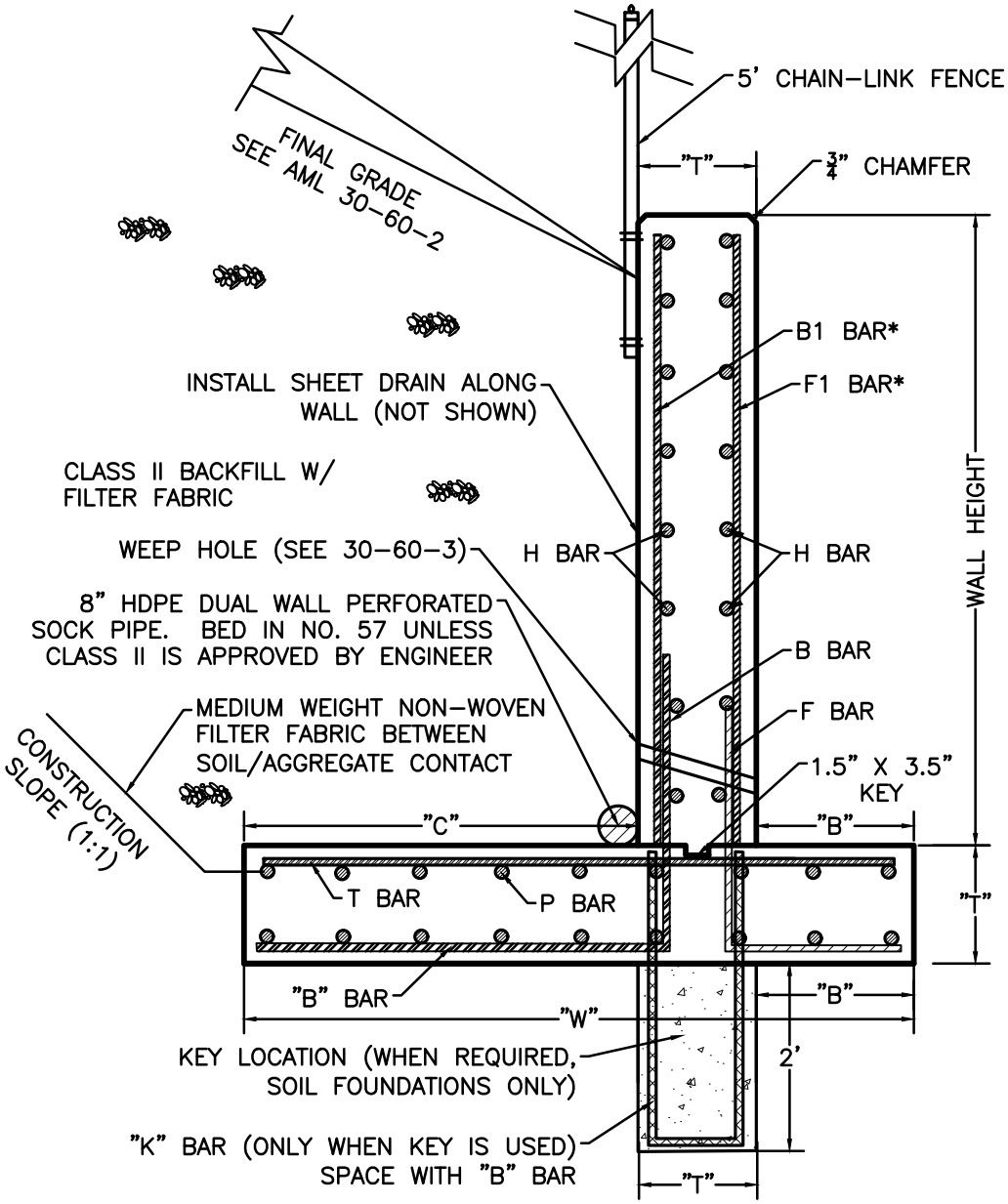

KEY AND FOOTING SHALL BE SAME CONCRETE POUR

THE BASE OF THE FOOTER MUST BE SET MIN. 24" DEPTH.

WALLS TERMINATE INTO HILLSIDE WINGED OR AT 90° ANGLE.

WALL DIMENSIONS (FEET)				
WALL HT	"B"	"C"	"T"	"W"
5'-7'	2.00	3.00	1.00	6.00
8'-10'	2.25	3.50	1.25	7.00
11'-13'	2.75	4.00	1.25	8.00
14'-16'	3.50	5.00	1.50	10.00
17'-20'	4.00	6.25	2.25	12.50

ALL REINFORCEMENT IS TO BE SPACED AT 12 INCH CENTERS

REINFORCEMENT REQUIREMENTS						
WALL HT	B BAR	F BAR	H BAR	P BAR	T BAR	K BAR
5'-7'	#5	#5	#4	#5	#5	#4
8'-10'	#6	#5	#5	#5	#6	#4
11'-13'	#7	#5	#5	#5	#7	#4
14'-16'	#8	#5	#6	#5	#8	#4
17'-20'	#9	#5	#6	#5	#9	#4

* B1 BAR IS TO BE ONE BAR SIZE SMALLER THAN "B" BAR
* F1 BAR IS TO BE ONE BAR SIZE SMALLER THAN "F" BAR

NUMBER OF H BARS TO USE IS EQUAL TO WALL HEIGHT X 2
NUMBER OF P BARS TO USE IS EQUAL TO "W" (FOOTING WIDTH) X 2

BAR DIMENSIONS (FEET)			
WALL HT	B BAR	F BAR	K BAR
5'-7'	L= 3.00', M= 2.75'	L= 2.75', N= 1.75'	L= 2.75', N= 0.50'
8'-10'	L= 3.33', M= 3.25'	L= 2.75', N= 2.0'	L= 3.0', N= 0.75'
11'-13'	L= 4.00', M= 3.75'	L= 3.50', N= 2.50'	L= 3.0', N= 0.75'
14'-16'	L= 5.00', M= 4.75'	L= 3.75', N= 3.25'	L= 3.25', N= 1.00'
17'-20'	L= 7.25', M= 6.00'	L= 4.25', N= 3.75'	L= 4.0', N= 1.50'

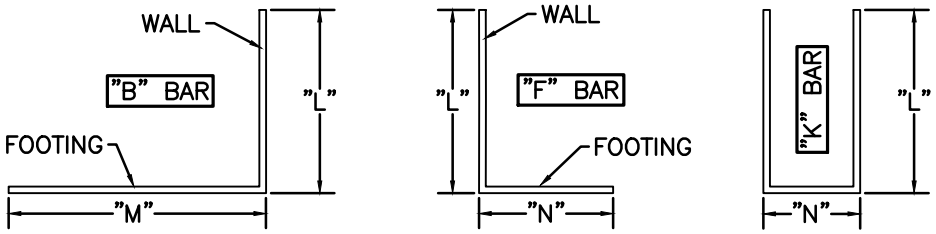

(WHEN REQUIRED)

USE WITH AML 30-60-2 TO 5

REINFORCED CONCRETE WALL (HEIGHTS FROM 5' TO 20') (AML 30-60-1)

KY DAML 7-2017

CONSTRUCTION NOTES:

ALL FOUNDATION EXCAVATION AREA SHALL BE APPROVED BY THE ENGINEER, PRIOR TO THE PLACEMENT OF FORMWORK AND REBAR PLACEMENT. IN THE OPINION OF THE ENGINEER, ANY AREA NOT SUITABLE FOR FOOTING PLACEMENT (I.E. SOFT, SATURATED, ETC.) SHALL BE OVER EXCAVATED AND BACKFILLED WITH MECHANICALLY COMPACTED DENSE GRADE AGGREGATE AS DIRECTED BY THE ENGINEER.

ALL REINFORCING BARS ARE 2" FROM EDGE UNLESS OTHERWISE NOTED.

SAFETY FENCE MAY BE BOLTED TO THE WALL OR SET IN PLACE WITH CONCRETE BEHIND THE WALL. DO NOT PLACE FENCE IN THE WALL.

CONSTRUCTION JOINTS SHALL BE PLACED A MINIMUM OF 10' & A MAXIMUM OF 20'.

ALL STEEL REINFORCEMENT SHALL BE 60 KSI.

ALL CONCRETE SHALL BE 4,000 PSI WITH FIBER REINFORCEMENT.

FINAL SLOPE SHALL BE MAX 2:1 FROM THE TOP EDGE OF THE WALL, MAX. 1.5:1 IF ROCK FROM WALL IS LEVEL FOR 10' THEN SLOPED UP.

AT THE CONTRACTOR'S REQUEST, THE LENGTHS OF THE LONGITUDINAL REINFORCEMENT MAY BE CHANGED WITH PRIOR APPROVAL OF THE ENGINEER. LONGER OR SHORTER LONGITUDINAL BARS MAY BE USED TO ACCOMMODATE CONSTRUCTION OR FOR ECONOMY. ALL WORK AND/OR MATERIALS REQUIRED FOR CHANGES IN THE LENGTHS OF LONGITUDINAL REINFORCEMENT SHALL BE AT NO COST TO AML. SPLICES MUST BE IN ACCORDANCE WITH THE "STEEL" SECTION OF THE TECHNICAL SPECIFICATIONS.

CONCRETE VOLUMES

WALL HEIGHT	VOLUME (PER FOOT OF WALL LENGTH)	Key Volume (PER FOOT OF WALL LENGTH)
5'-7'	V= 0.23 + (.04 x H)	0.074 Cu. Yds.
8'-10'	V= 0.32 + (.05 x H)	0.093 Cu. Yds.
11'-13'	V= 0.37 + (.05 x H)	0.093 Cu. Yds.
14'-16'	V= 0.56 + (.06 x H)	0.111 Cu. Yds.
17'-20'	V= 1.04 + (.09 x H)	0.167 Cu. Yds.

V= Cu. Yds. PER FOOT OF WALL LENGTH
H= ACTUAL WALL HEIGHT USED FOR DESIGN

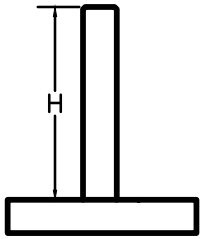

Example: 12' Wall Height, 100' Long, with Key

V= 0.37+(.05 x 12) + 0.093 = 1.063
Total V= 1.063 x 100' = 106.3 Cu. Yds.

REINFORCEMENT QUANTITIES

WALL HEIGHT	FOOTING*	WALL**	ADD FOR "K" BAR
5'-7'	29.50	2.68	4.00
8'-10'	35.00	3.80	4.50
11'-13'	54.63	4.26	4.50
14'-16'	80.22	5.72	5.00
17'-20'	118.38	6.34	6.35

* PER FOOT OF WALL LENGTH
** PER FOOT OF WALL HEIGHT AND PER FOOT OF WALL LENGTH

Example: 12' Wall Height, 100' Long, with Key

[(4.26 x 12) + 54.63 + 3.85] x 100 = 10,960 LBS. REINFORCEMENT

WALL HEIGHT — "K" BAR BECAUSE USING KEY

USE WITH AML 30–60–1

REINFORCED CONCRETE WALL- CONSTRUCTION NOTES & QUANTITIES (AML 30-60-2)

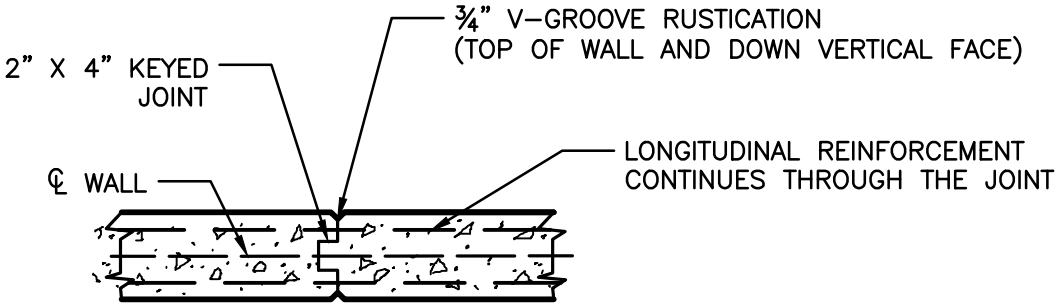

CONSTRUCTION JOINT DETAIL

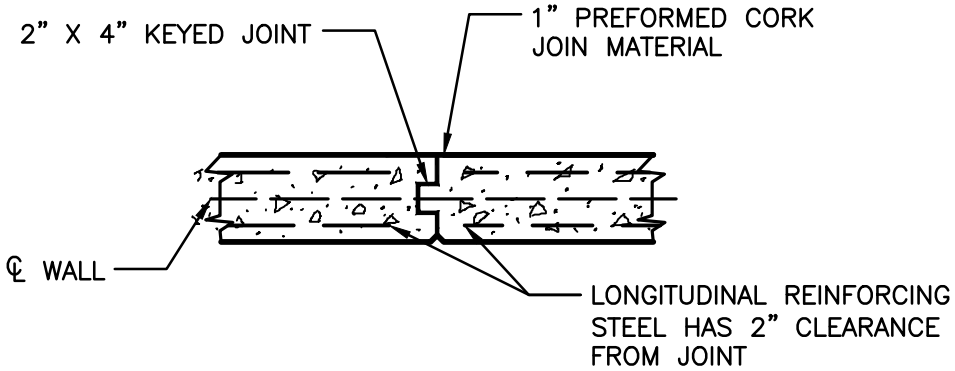

EXPANSION JOINT DETAIL

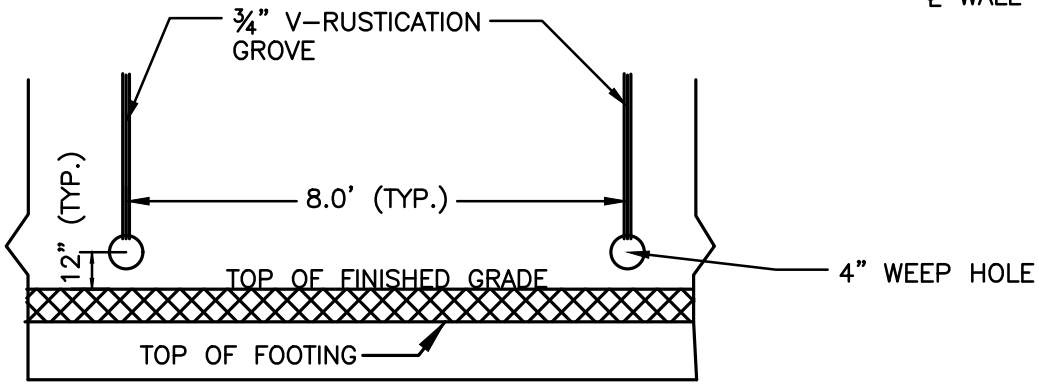

WEEP HOLE DETAIL

USE WITH AML 30–60–1

REINFORCED CONCRETE WALL- JOINTS & WEEP HOLES (AML 30-60-3)

KY DAML 1–2013

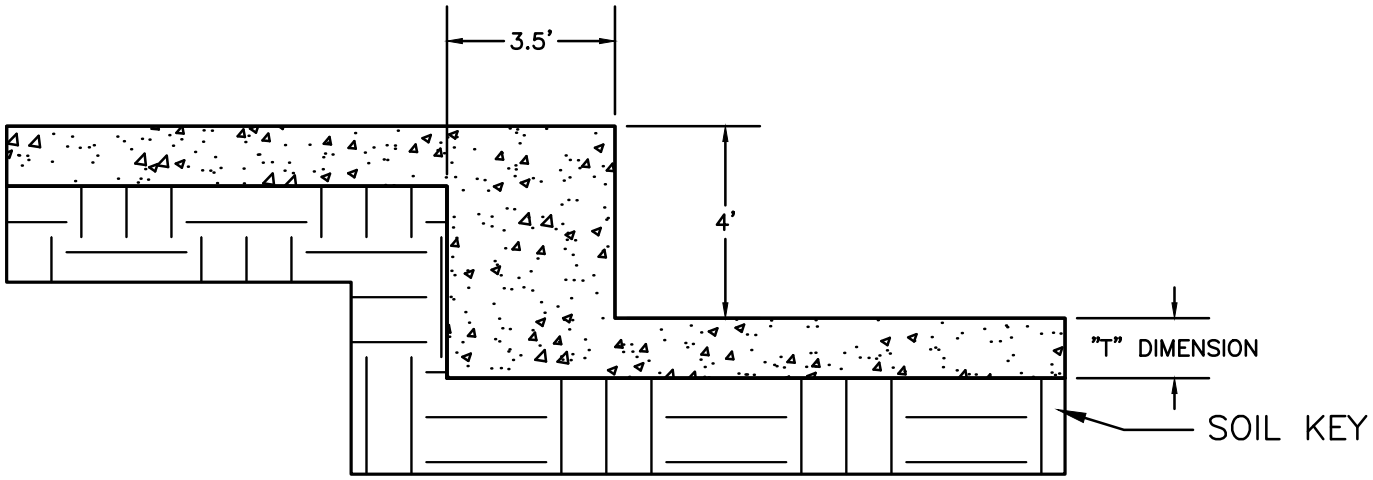

STEP FOOTER CONCRETE

NTS

STEP–DOWN REINFORCEMENT GUIDE
#5 REBAR (NTS)

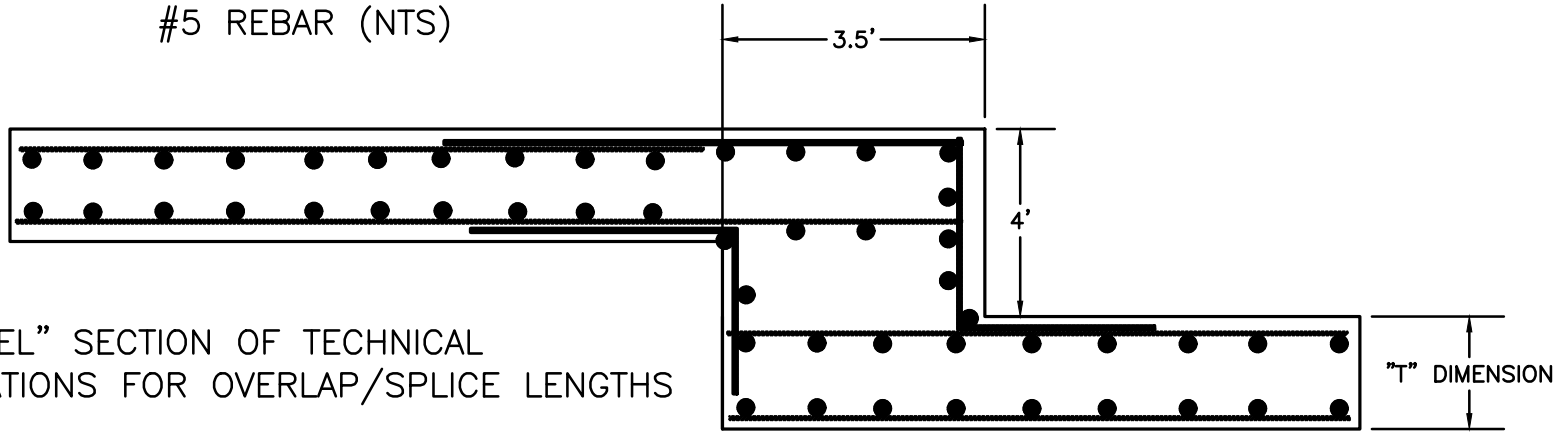

SEE "STEEL" SECTION OF TECHNICAL
SPECIFICATIONS FOR OVERLAP/SPLICE LENGTHS

NTS

STEP FOOTER REINFORCEMENT

USE WITH AML 30–60–1 TO 6

REINFORCED CONCRETE WALL- STEP FOOTER (AML 30-60-4)

KY DAML 1–2013

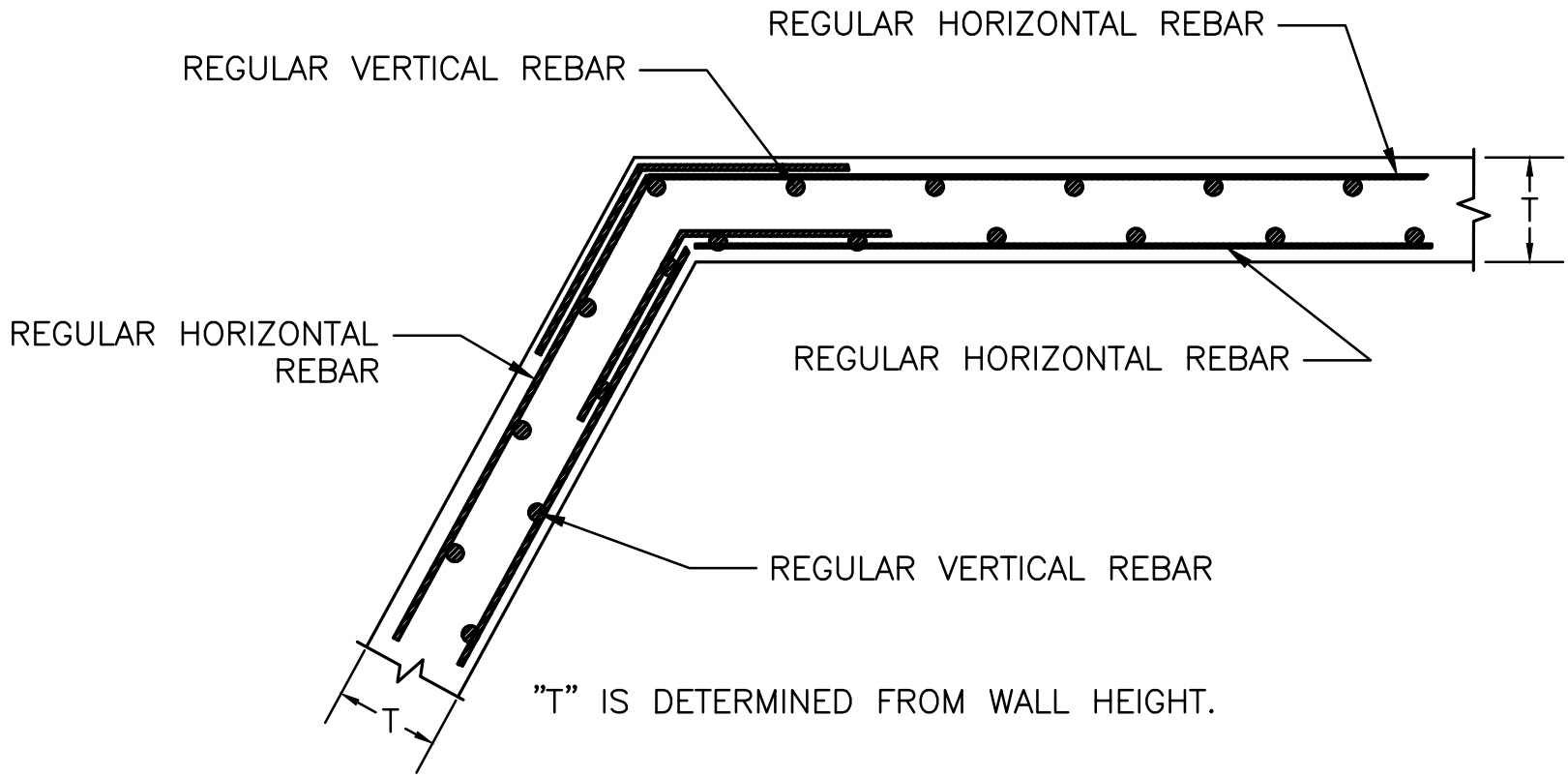

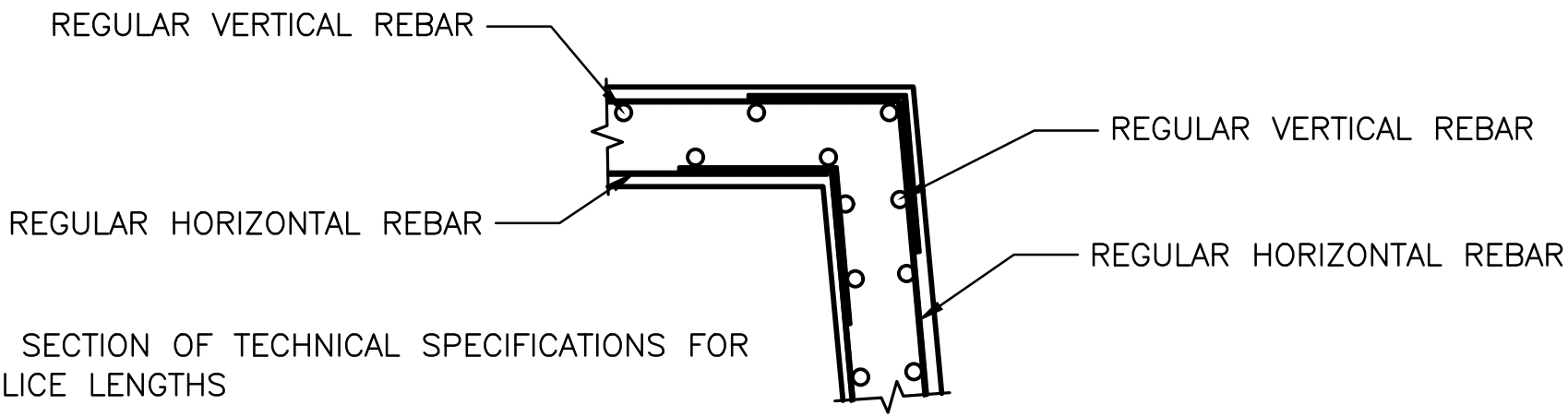

SEE "STEEL" SECTION OF TECHNICAL SPECIFICATIONS FOR OVERLAP/SPLICE LENGTHS

USE WITH AML 30–60–1 TO 6

REINFORCED CONCRETE WALL- BENDS (AML 30-60-5)

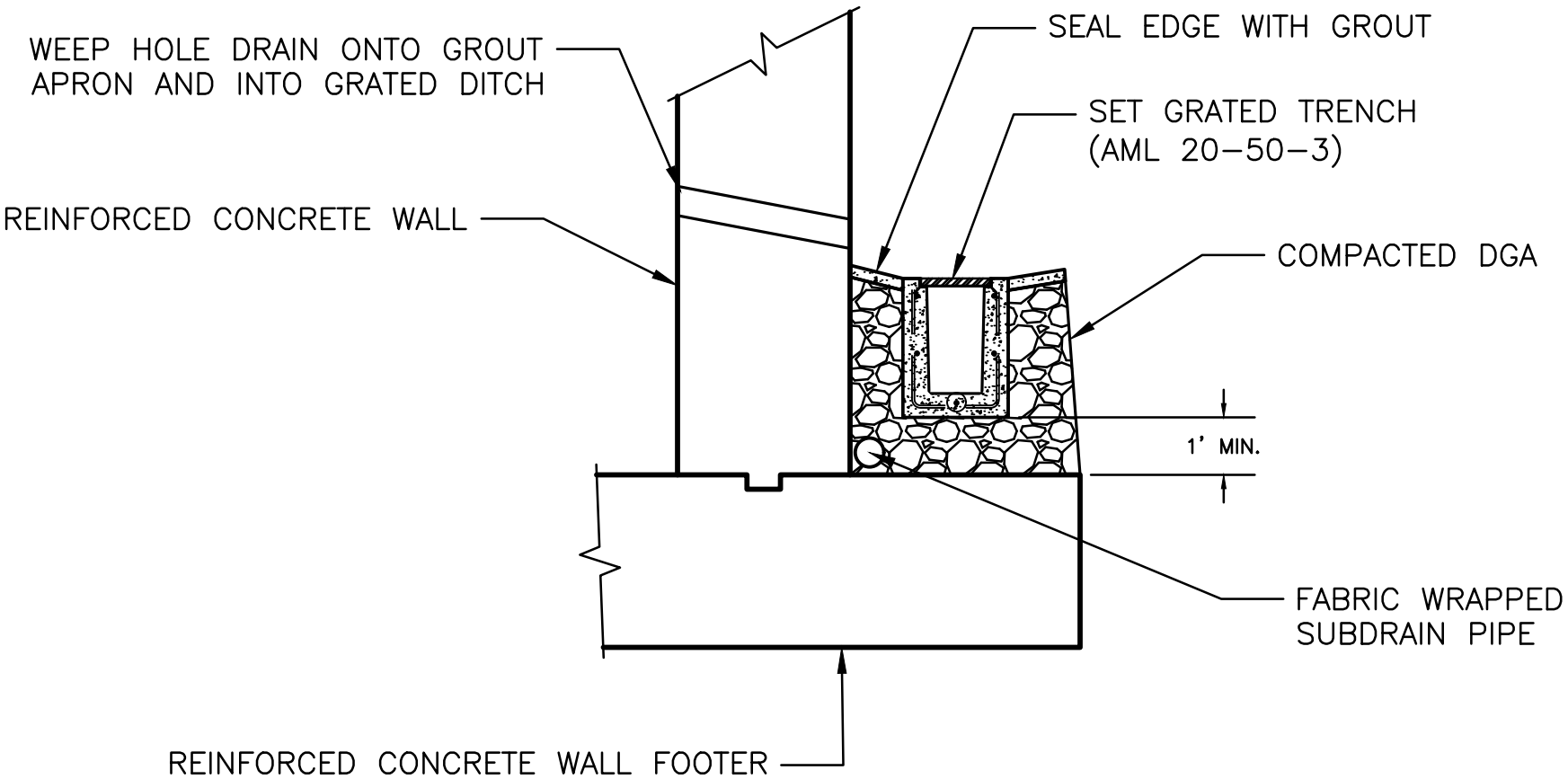

USE WITH AML 30–60–1, 20–50–3 & 4, 23–50–1

REINFORCED CONCRETE WALL W/ GRATED TRENCH DRAIN (AML 30-60-6)

KY DAML 1–2013

NOTE: ALL CONCRETE 4,000 PSI

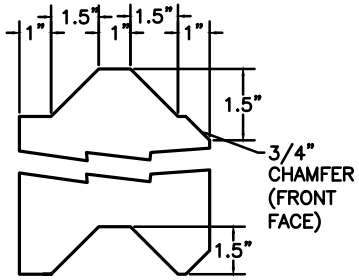

PRECAST CONCRETE LAGGING KEY

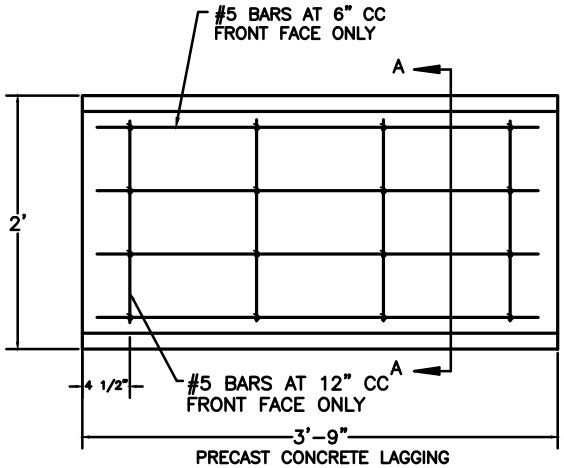

PRECAST CONCRETE LAGGING

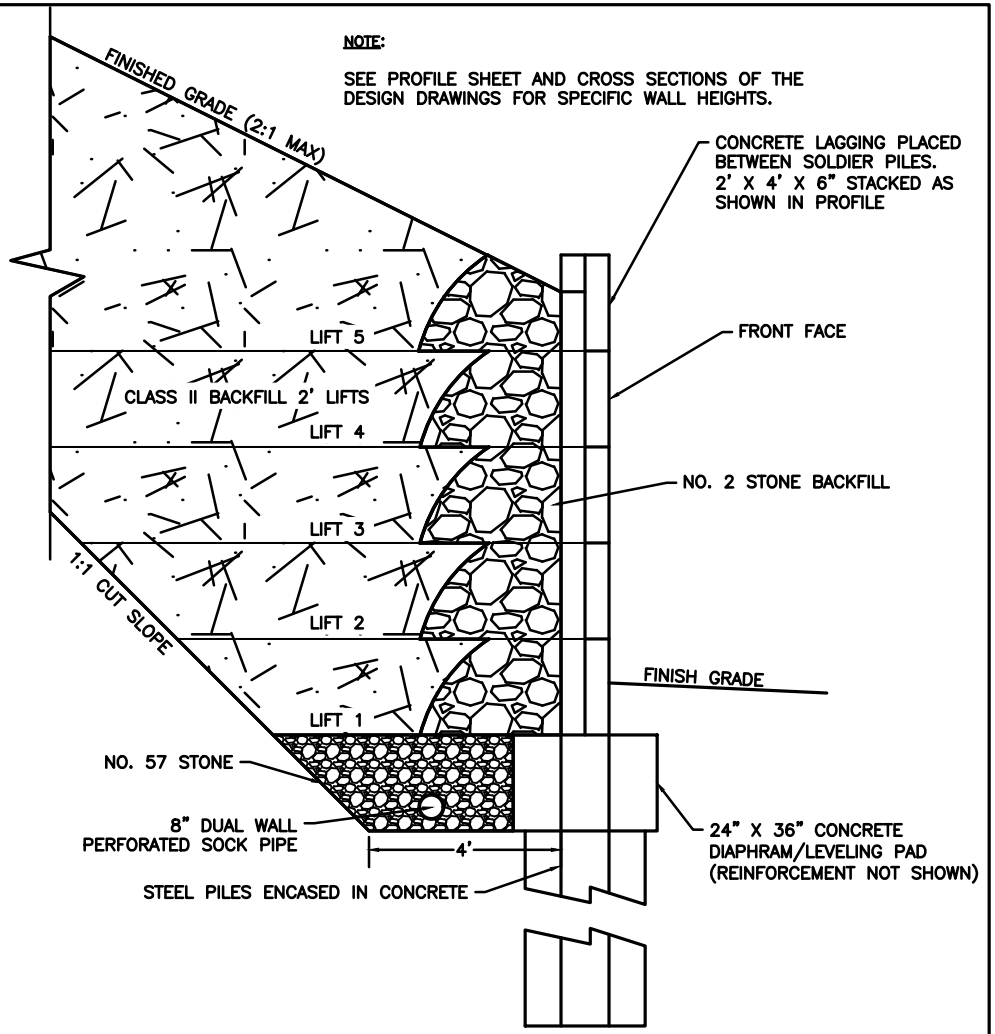

NOTE:

SEE PROFILE SHEET AND CROSS SECTIONS OF THE DESIGN DRAWINGS FOR SPECIFIC WALL HEIGHTS.

SECTION – PILE AND LAGGING WALL

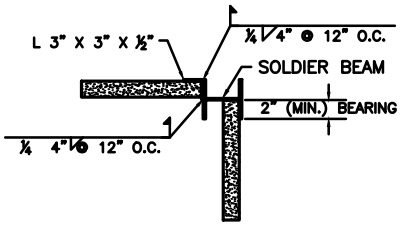

INSIDE CORNER LAGGING

NTS

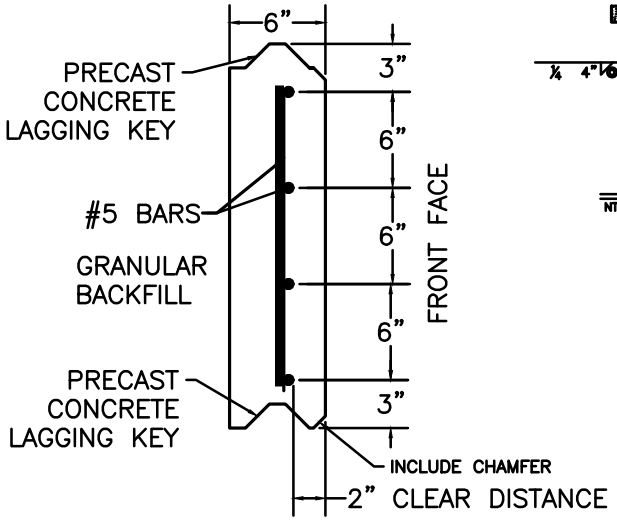

SECTION A–A

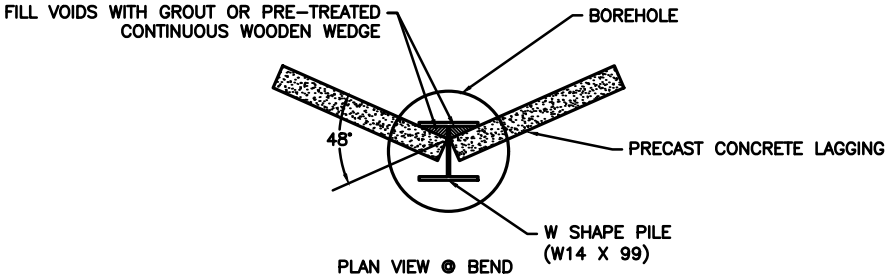

FLANGE PRESSURE DISTRIBUTION DETAIL

NTS

USE WITH AML 30–70–2

PILE AND LAGGING WALL- SHEET 1 (AML 30-70-1)

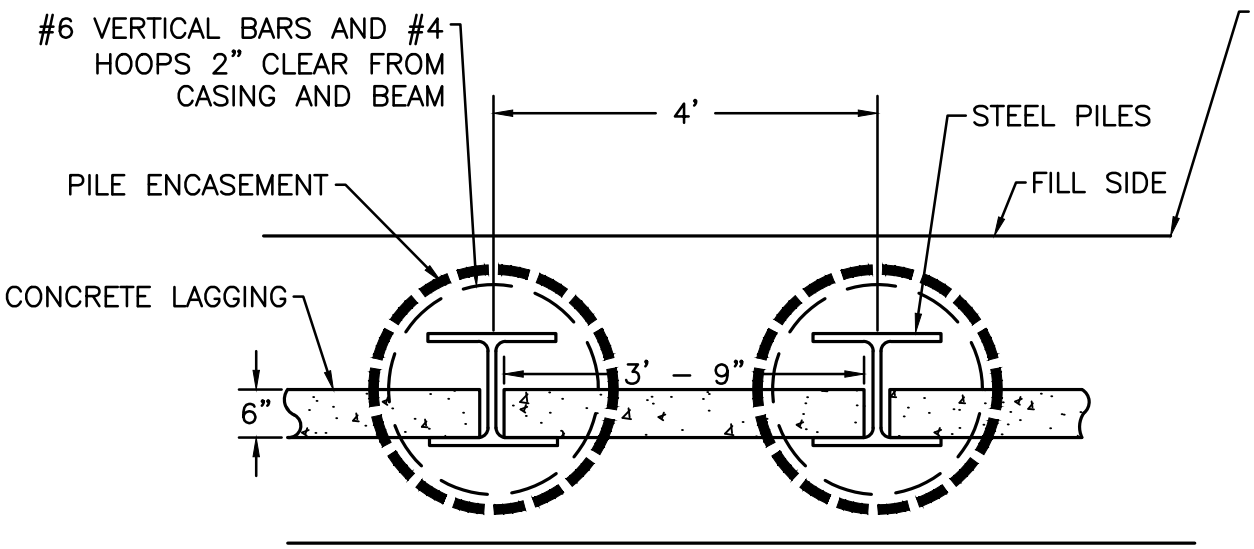

PLAN VIEW
NTS

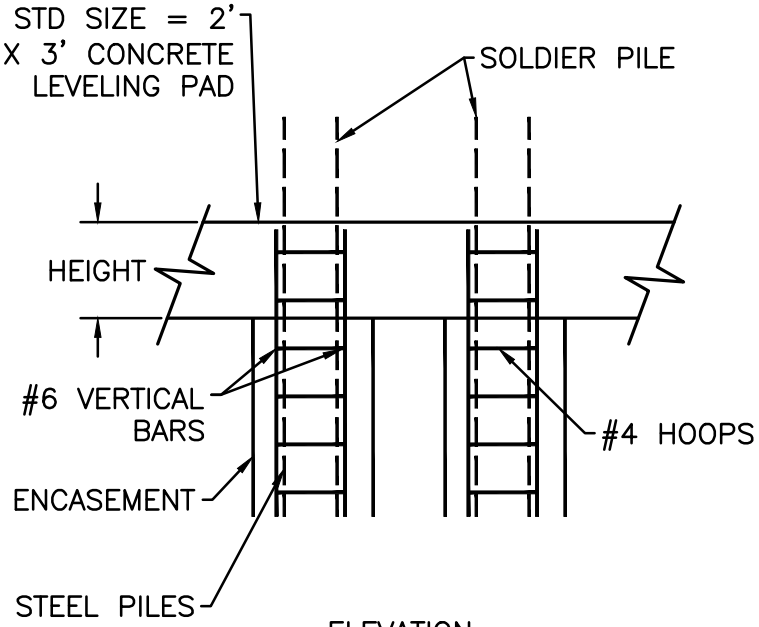

ELEVATION
NTS

HOLE DIA.	NO. OF #6 BARS
18"	0
24"	7
30"	9
36"	11

REINFORCED CAGE

NOTE:

THE CONTRACTOR SHALL NOTIFY THE ENGINEER PRIOR TO FORMING AND/OR POURING ANY PANELS SUCH THAT THE ENGINEER MAY HAVE A REPRESENTATIVE ON SITE PRIOR TO AND DURING THE POURING PROCESS.

ALL STEEL REINFORCEMENT SHALL BE ACCURATELY PLACED IN THE FORMS VERTICALLY AND HORIZONTALLY OF THE THE POSITIONS SHOWN. THE REINFORCEMENT CAGE (REAR) SHALL BE HELD FIRMLY IN PLACE BY THE USE OF CHAIRS AND WIRE TIES DURING THE VIBRATION, AGITATION, AND CURING CYCLES OF THE CONCRETE TO PREVENT MOVEMENT. WIRE TIES SHALL BE USED IN THE FABRICATION OF THE REINFORCEMENT CAGE (REBAR). ALL STEEL REINFORCEMENT SHALL BE 60 KSI. WELDING SHALL NOT BE PERMITTED.

FOR SPLICES SEE AML 30–70–3 AND "STEEL" SECTION OF TECHNICAL SPECIFICATIONS.

THE NO. 6 BARS TIE THE COLUMN AND FOOTER TOGETHER. SEE AML 30–30–2 FOR THE CONCRETE LEVELING PAD REINFORCEMENT DETAILS. STANDARD LEVELING PAD SIZE IS 2' H X 3' W.

USE WITH AML 30-70-1

PILE AND LAGGING WALL- REBAR CAGE (AML 30-70-2A)

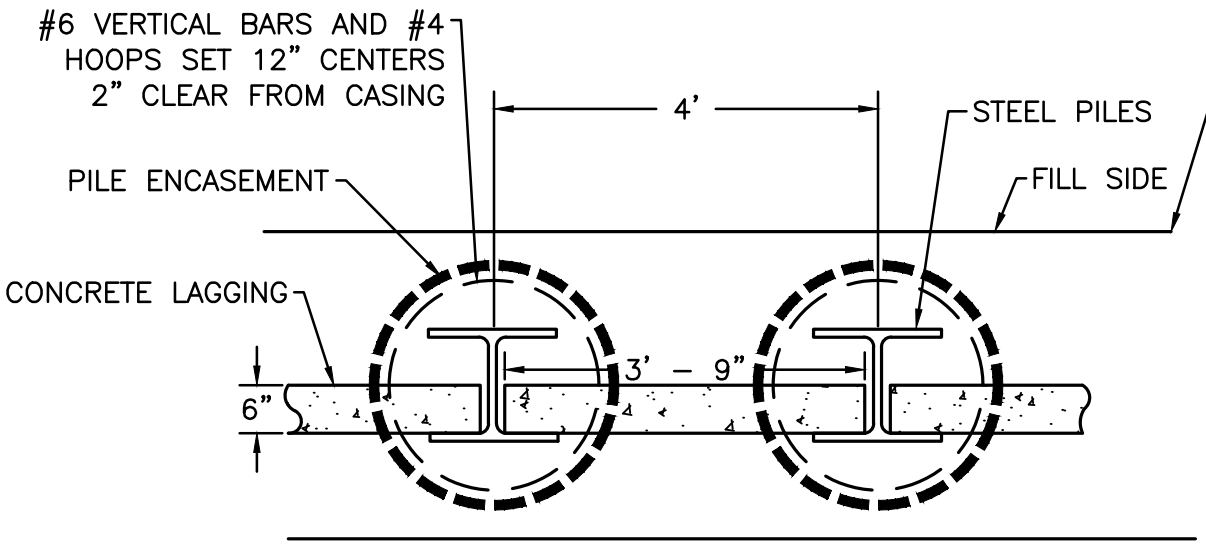

PLAN VIEW
NTS

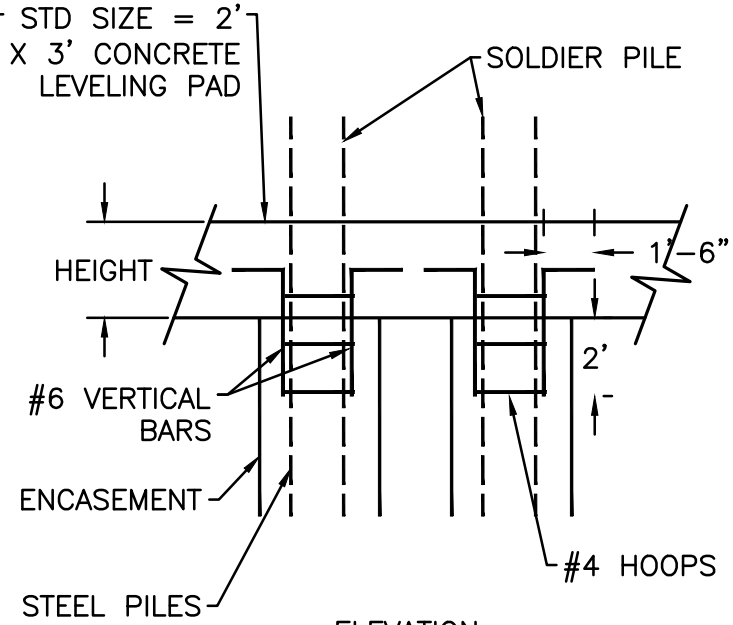

ELEVATION
NTS

HOLE DIA.	NO. OF #6 BARS
18"	0
24"	7
30"	9
36"	11

REBAR TIES

NOTE:

THE CONTRACTOR SHALL NOTIFY THE ENGINEER PRIOR TO FORMING AND/OR POURING ANY PANELS SUCH THAT THE ENGINEER MAY HAVE A REPRESENTATIVE ON SITE PRIOR TO AND DURING THE POURING PROCESS.

ALL STEEL REINFORCEMENT SHALL BE ACCURATELY PLACED IN THE FORMS VERTICALLY AND HORIZONTALLY OF THE THE POSITIONS SHOWN. THE REINFORCEMENT TIE BETWEEN THE FOOTER AND PILE ENCASEMENT SHALL BE HELD FIRMLY IN PLACE BY THE USE OF CHAIRS AND WIRE TIES DURING THE VIBRATION, AGITATION, AND CURING CYCLES OF THE CONCRETE TO PREVENT MOVEMENT. WIRE TIES SHALL BE USED IN THE FABRICATION OF THE REINFORCEMENT REBAR. ALL STEEL REINFORCEMENT SHALL BE 60 KSI. WELDING SHALL NOT BE PERMITTED.

FOR SPLICES SEE AML 30–70–3 AND "STEEL" SECTION OF TECHNICAL SPECIFICATIONS.

THE NO. 6 BARS TIE THE COLUMN AND FOOTER TOGETHER. SEE AML 30–30–2 FOR THE CONCRETE LEVELING PAD REINFORCEMENT DETAILS. STANDARD LEVELING PAD SIZE IS 2' H X 3' W.

USE WITH AML 30-70-1

PILE AND LAGGING WALL- REBAR TIES (AML 30-70-2B)

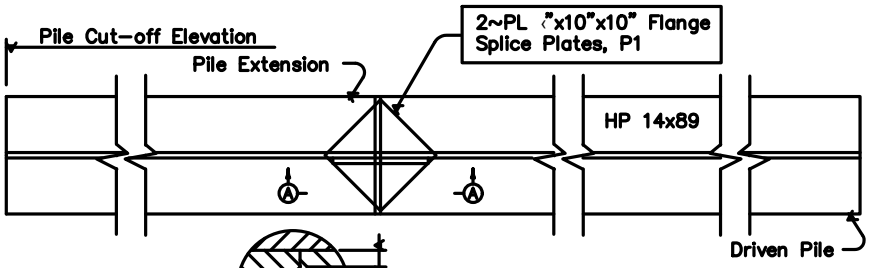

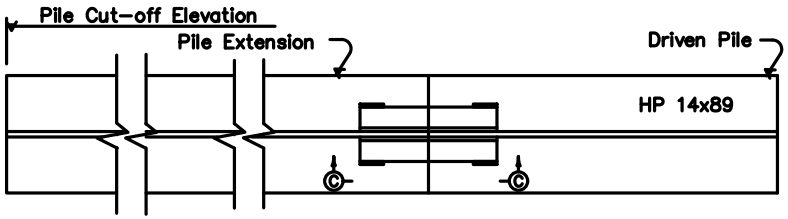

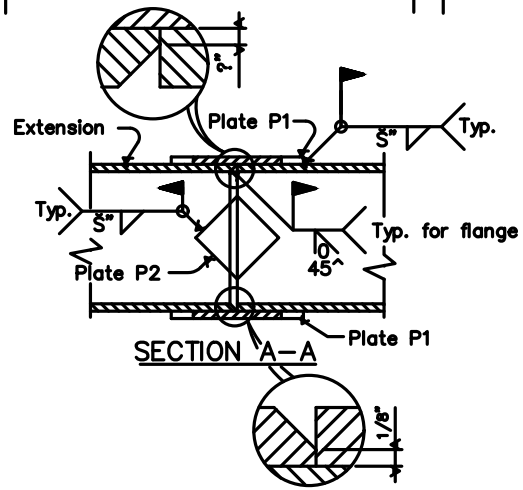

SECTION A–A

NOTE:
Bevel flanges and web of pile extension on 1:1 bevel as shown and employ conventional butt weld.

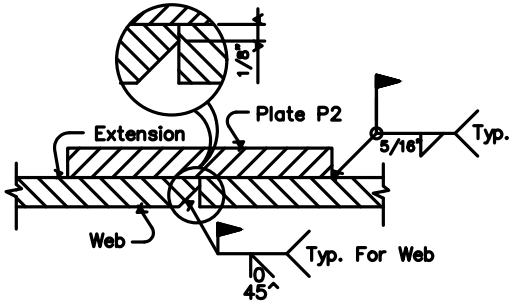

SECTION B–B
(Flange Not Shown)

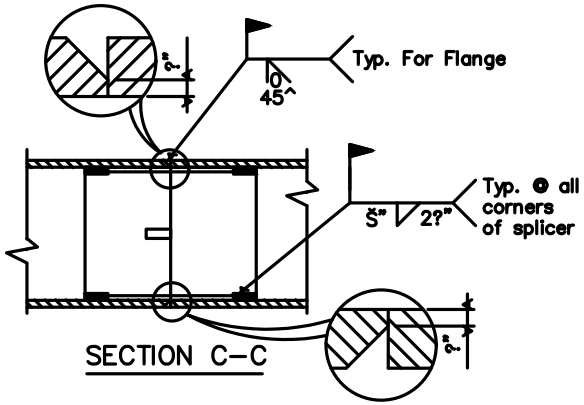

SECTION C–C

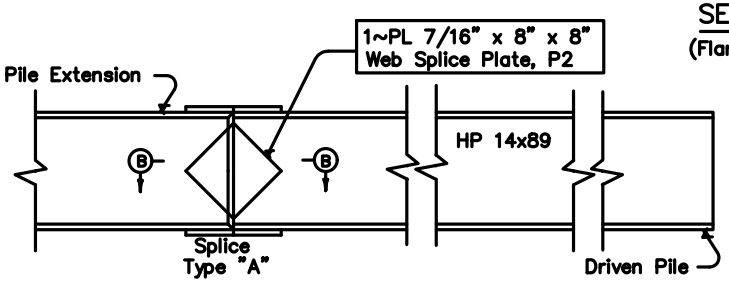

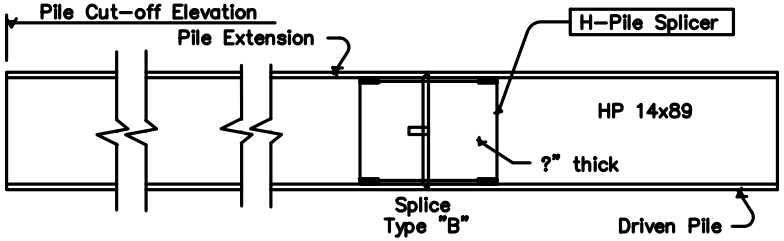

GENERAL NOTES

FIELD WELDS: ENSURE FIELD WELDING MATERIAL AND WORKMANSHIP FOR ALL PILINGS CONFORMS TO THE CURRENT JOINT SPECIFICATIONS ANSI/AASHTO/AWS D1.5 BRIDGE WELDING CODE. SPLICE PILES AS INDICATED ABOVE ONLY WHEN DRIVEN BELOW CUT-OFF ELEVATION.

SPLICE PLATES: ENSURE ALL PILE SPLICING OPTIONS CONFORM TO ASTM A36, CURRENT SPECIFICATIONS. IN LIEU OF SPLICE OPTION 'A' OR SPLICE OPTION 'B', SPLICE PLATES MAY BE FLAME CUT FROM HP OR W SECTIONS. IF FLANGE SECTIONS ARE USED, THE PORTION CUT AT THE WEB MUST BE TURNED OUTSIDE IN ORDER TO OBTAIN A TIGHT FIT. GRIND THE EDGES SMOOTH PRIOR TO WELDING.

SPLICE OPTION 'B': THE PILE SPLICER SHOWN IN THE DETAILS FOR SPLICE OPTION 'B' MAY BE CHAMPION H-PILE SPLICER, MODEL HP 30000, OR AN APPROVED EQUAL. ENSURE THE SPLICER IS IN ACCORDANCE TO THE MANUFACTURER'S RECOMMENDATIONS AND SUBJECT TO THE ENGINEER'S APPROVAL.

NOTE:

THIS DETAIL SHOWS HP 14X89 AS A TYPICAL SHAPE.
CHECK DESIGN PLANS FOR ACTUAL SHAPE AND SIZE USED.

STEEL PILE- SPLICING DETAILS (AML 30-70-3)

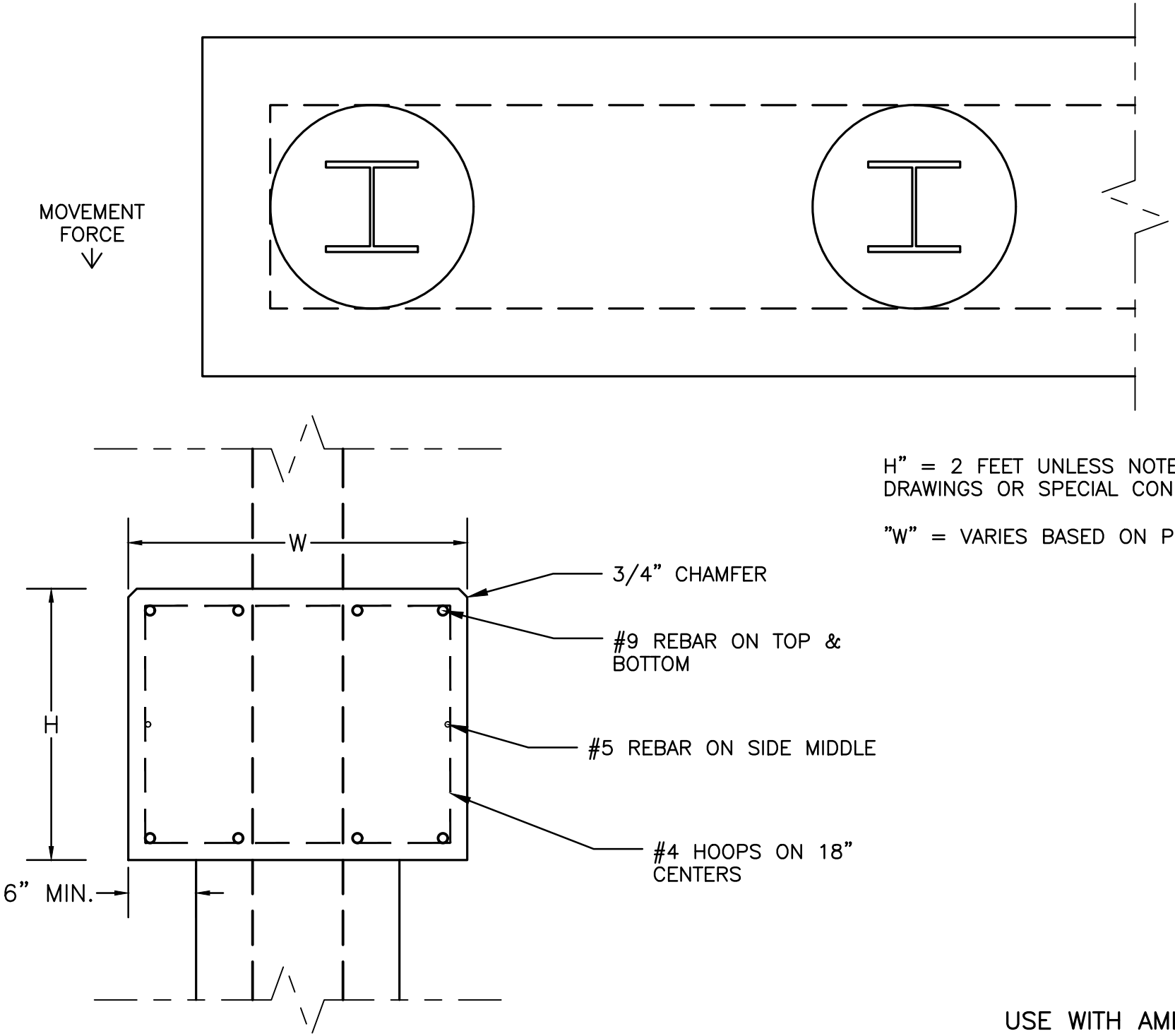

H" = 2 FEET UNLESS NOTED OTHERWISE ON DRAWINGS OR SPECIAL CONDITIONS.

"W" = VARIES BASED ON PILE SIZE + 12"

USE WITH AML 30–70–1 & 2

PILE & LAGGING WALL- REINFORCED CONCRETE CAP (AML 30-70-4)

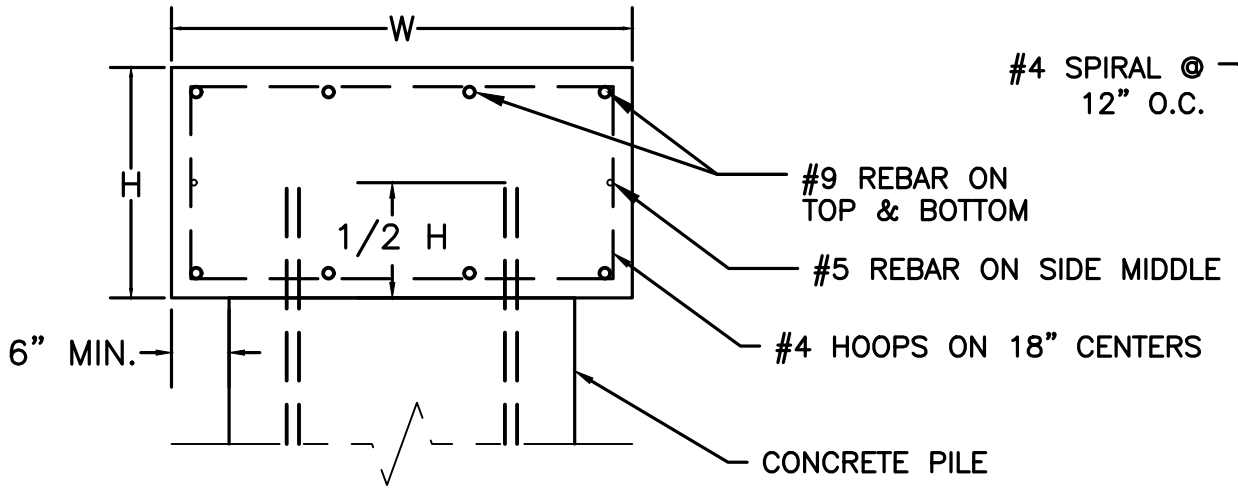

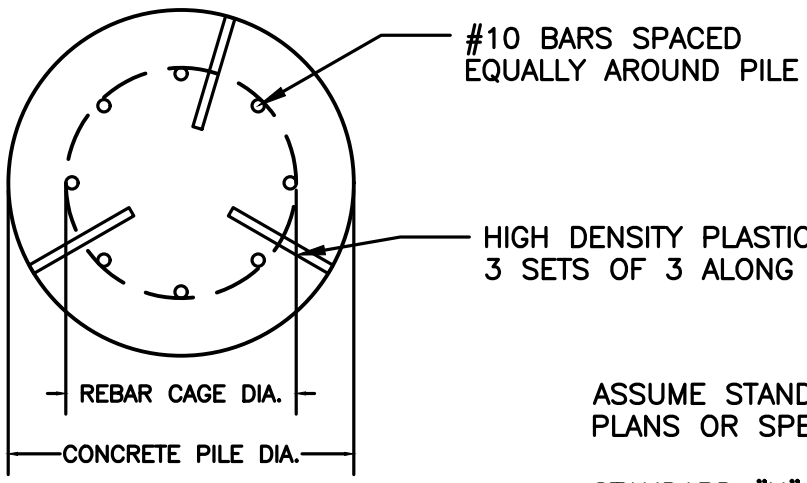

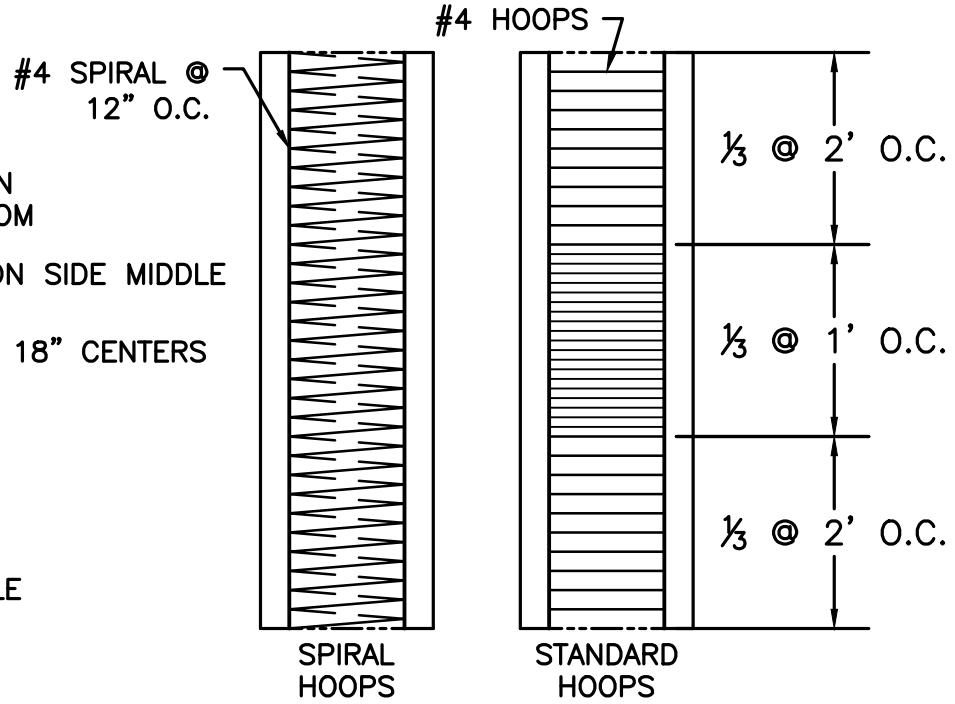

ASSUME STANDARD HOOPS UNLESS SPECIFIED OTHERWISE ON DESIGN PLANS OR SPECIAL CONDITIONS.

STANDARD "H"= 2 FEET UNLESS NOTED OTHERWISE ON DRAWINGS OR SPECIAL CONDITIONS. "W" = PILE DIA. + 6" OVERHANG ON EACH SIDE.

	REINFORCED CONCRETE CAP		CONCRETE PILE				SPACER SIZE
	STEEL (lbs)	CONCRETE (cyd)	STEEL (lbs)		CONCRETE (cyd)	NO. OF #10 BARS	
			w/ Spiral Hoops	w/ Standard Hoops			
24" PILE	33.19	0.22	2.8	34.32	0.116	7	6"
30" PILE	33.59	0.26	5.2	44.32	0.182	9	6"
36" PILE	34.09	0.30	6.4	52.93	0.262	11	9"
	PER LINEAR FOOT						

REINFORCED CONCRETE PILES & CAP (AML 30-80-1)

KY DAML 2-2013

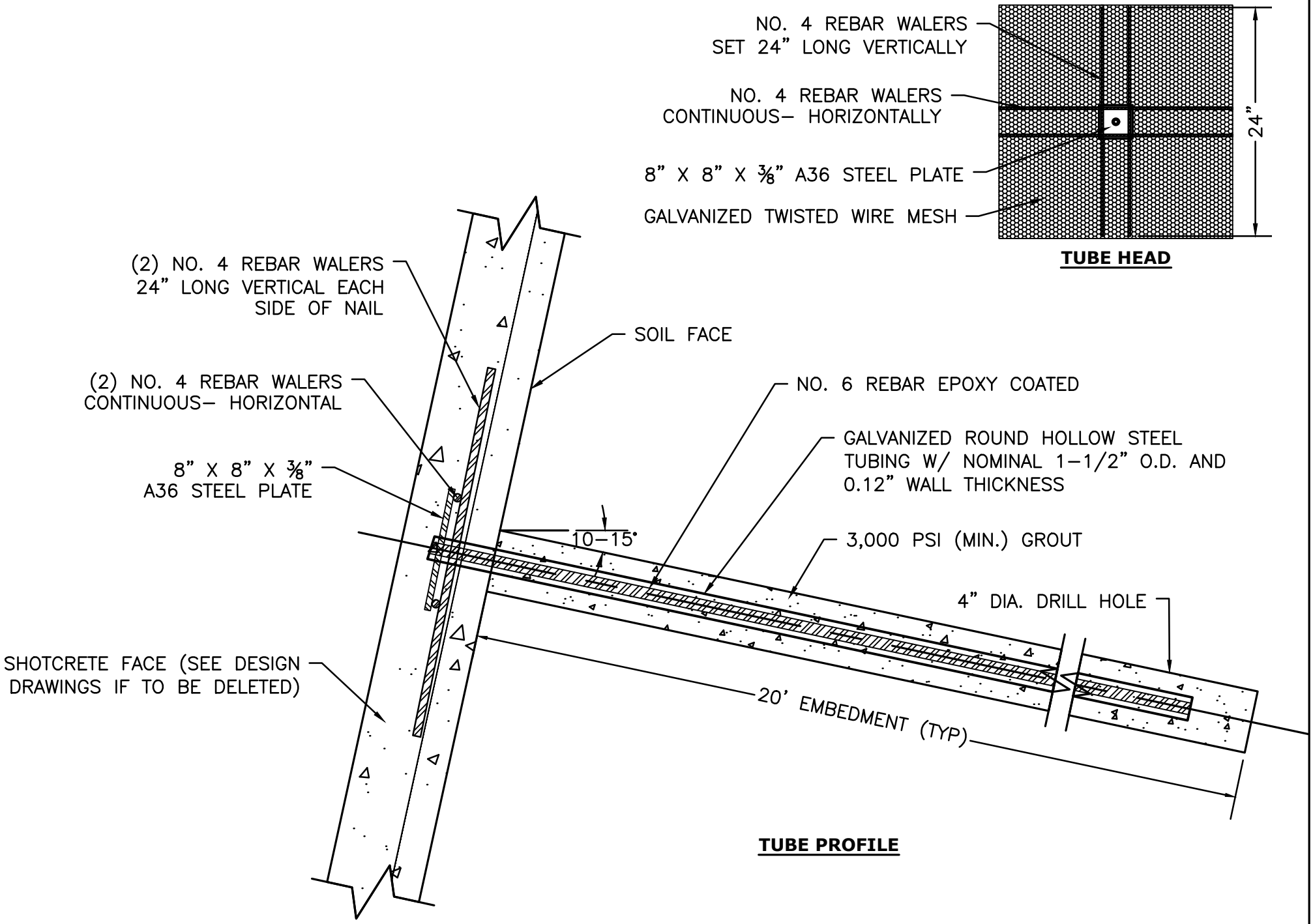

SOIL NAILS- SHEET 1 (AML 30-90-1)

KY DAML 4–2014

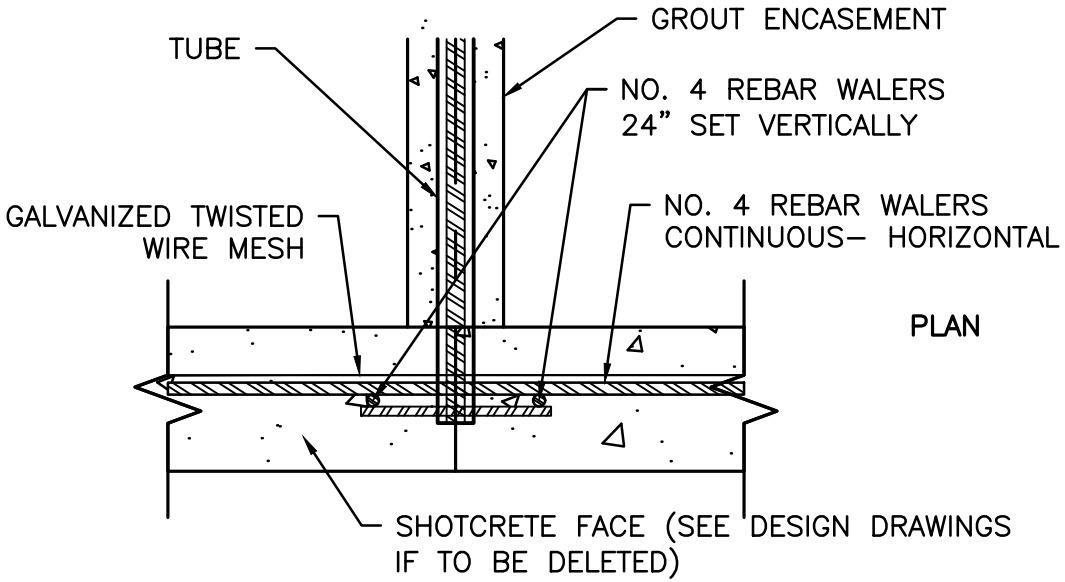

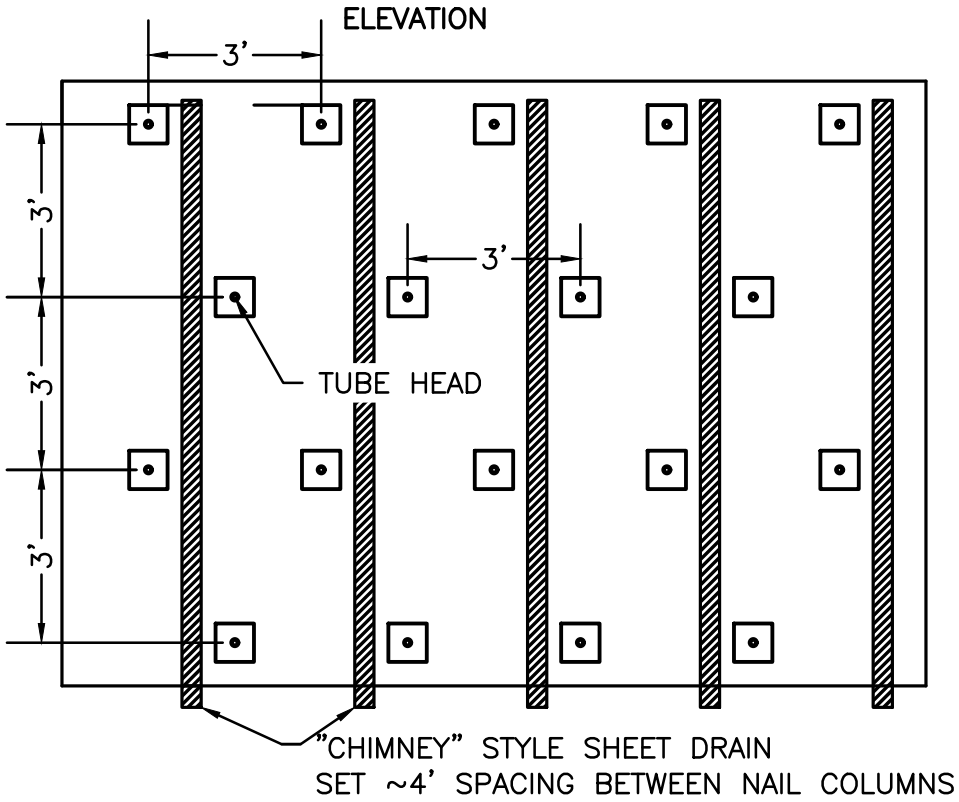

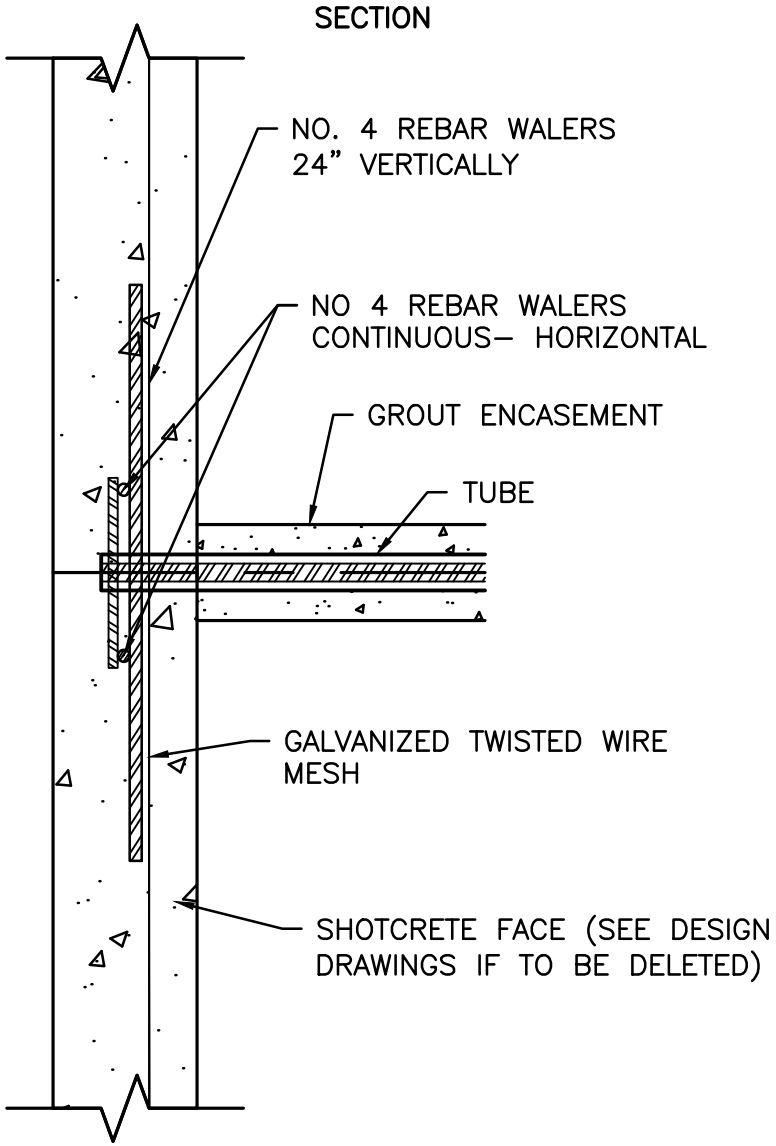

SOIL NAILS- SHEET 2 (AML 30-90-2)

KY DAML 4–2014

NOTE: INFORMATION TO BE DISPLAYED ON STEEL PLATE SHALL BE PROVIDED TO THE CONTRACTOR BY THE ENGINEER.

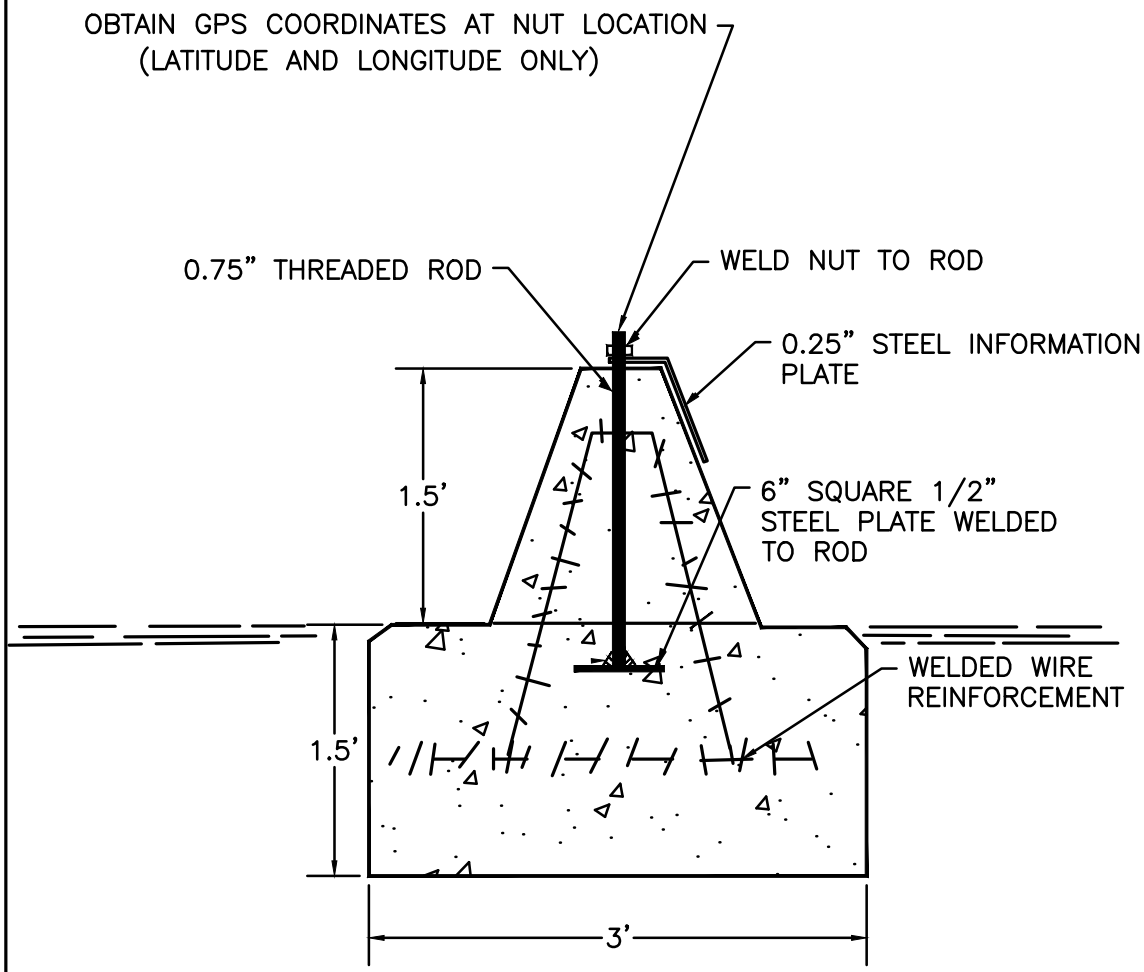

SIDE VIEW

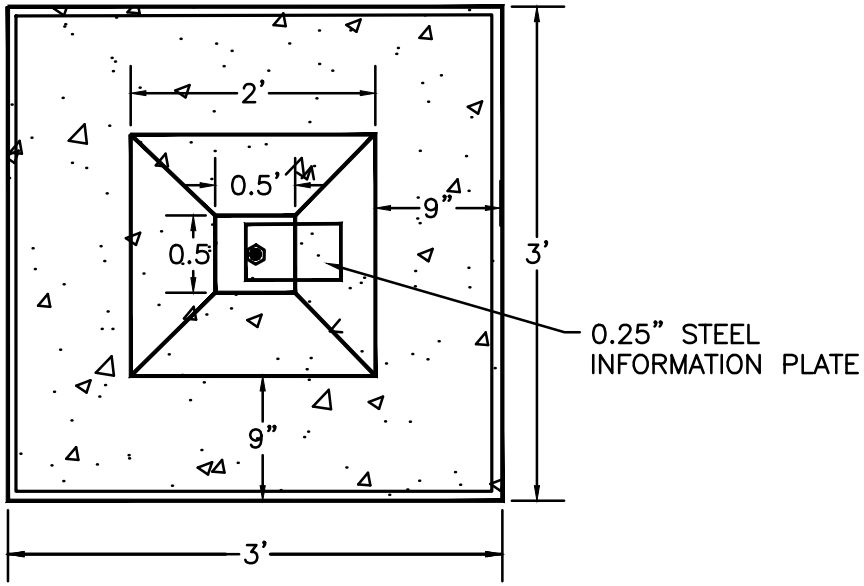

PLAN VIEW

CONCRETE MINE SHAFT MONUMENT (AML 40-10-1)

KY DAML 1-2013

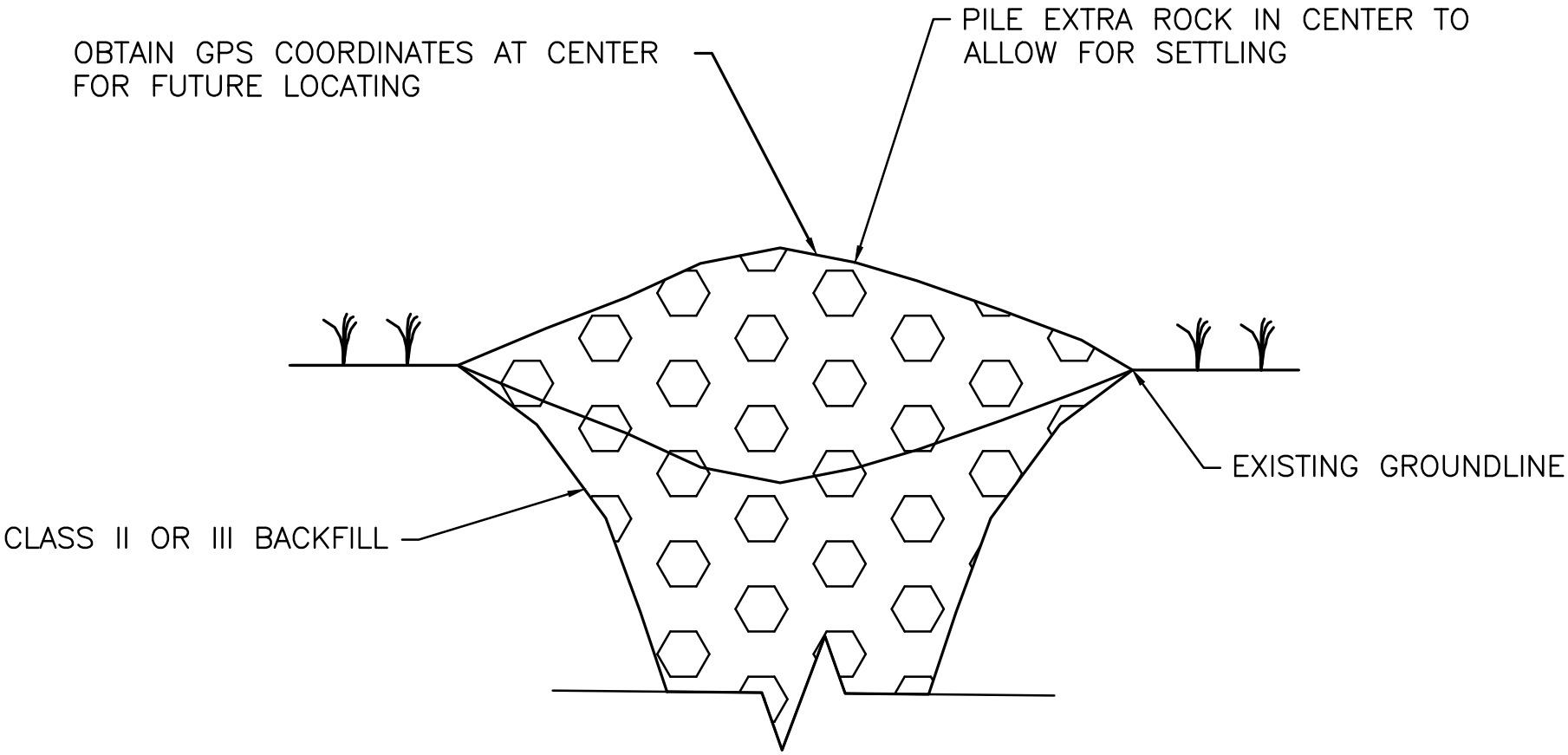

REMOVE DEBRIS PRIOR TO BACKFILLING

SUBSIDENCE AND MINE BACKFILL (AML 40-10-2)

KY DAML 1-2013

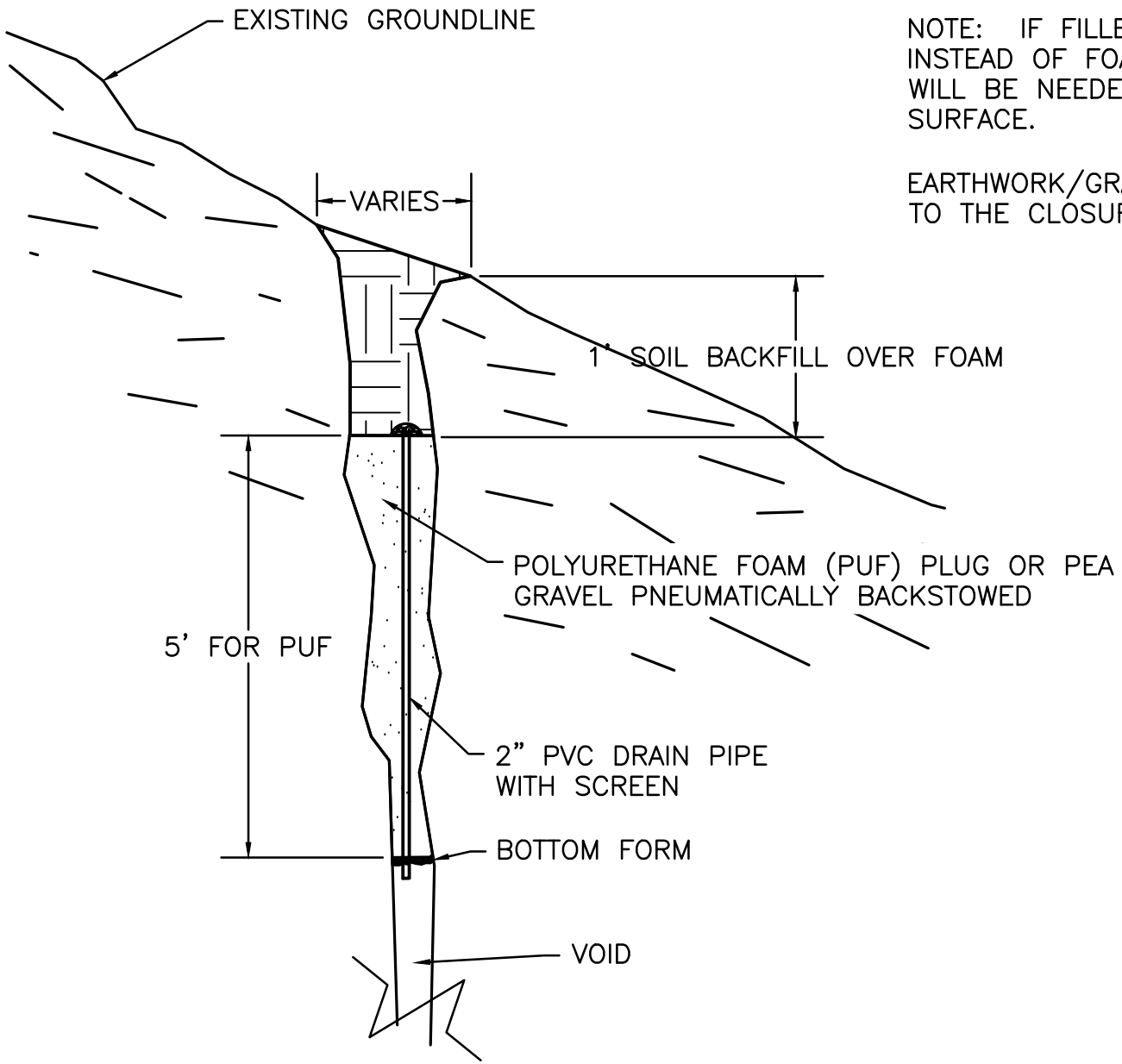

NOTE: IF FILLED WITH PEA GRAVEL INSTEAD OF FOAM, NO BOTTOM FORM WILL BE NEEDED. BRING GRAVEL TO SURFACE.

EARTHWORK/GRADEWORK IS INCIDENTAL TO THE CLOSURE.

MOUNTAIN BREAK BACKFILL (AML 40-10-3)

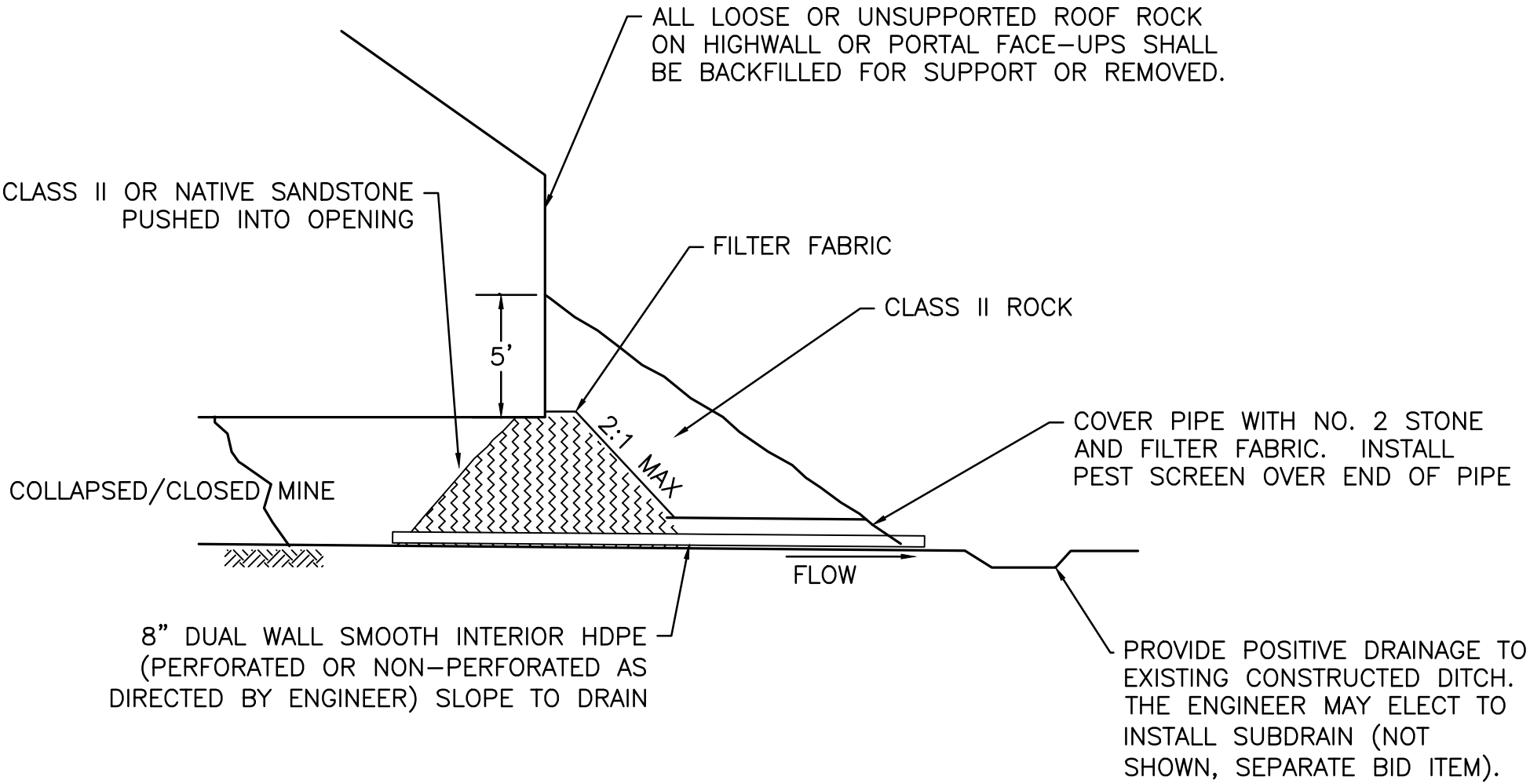

ALL ROCK, EXCAVATION, PIPE, SCREENS ARE INCIDENTAL TO EACH PORTAL CLOSURE.

IF PNEUMATICALLY BACKSTOWED GRAVEL, ROCK DITCHES, SUBDRAIN ARE USED THEY ARE SEPARATE BID ITEM.

ALL PIPE IS INCIDENTAL REGARDLESS OF LENGTH OR NUMBER OF SECTIONS REQUIRED.

SEE AML 40–20–11 FOR ADDITIONAL NOTES

STANDARD NON-WILDLIFE ACCESSIBLE CLOSURE (AML 40-20-1)

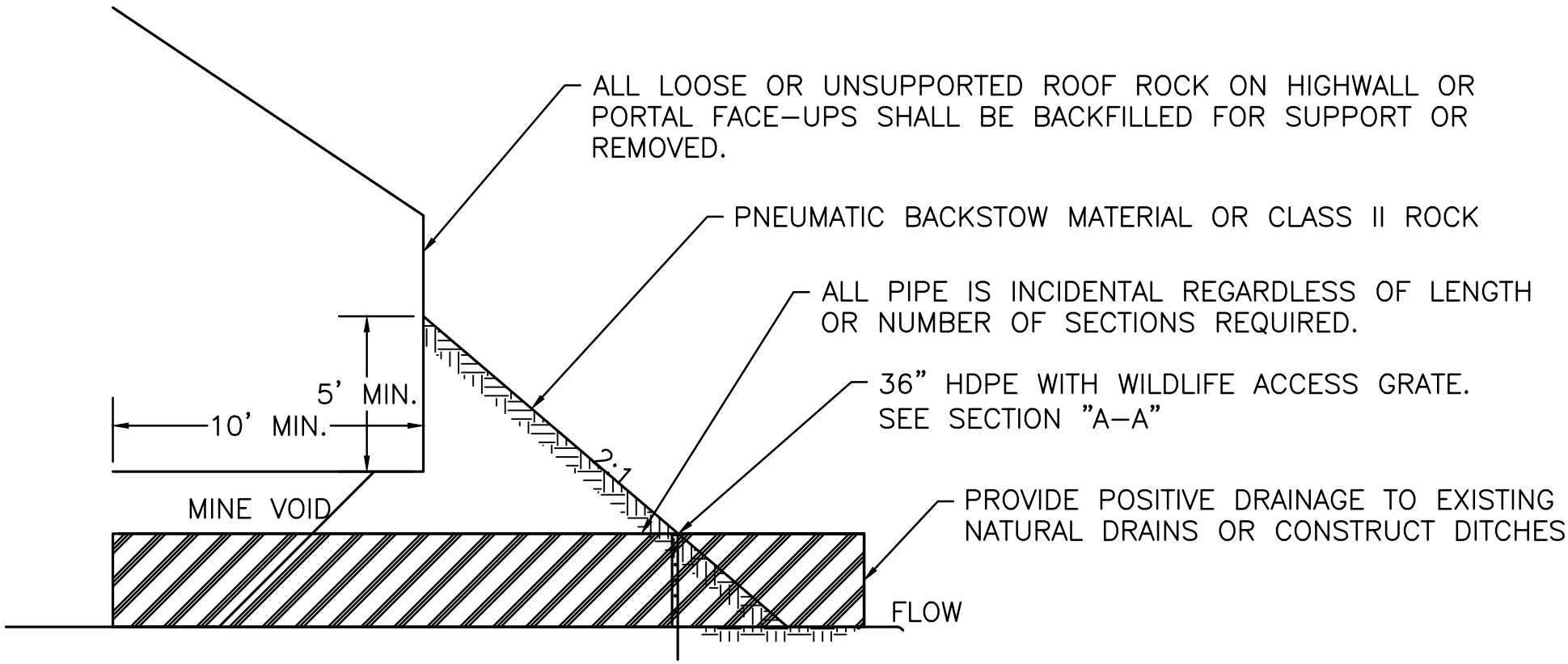

NOTE:

REBAR SHALL BE SET BACK THE DISTANCE FROM THE END TWICE THE DIAMETER OF THE PIPE. E.G. 36" PIPE WOULD BE SETBACK 6' MIN. FROM THE END.

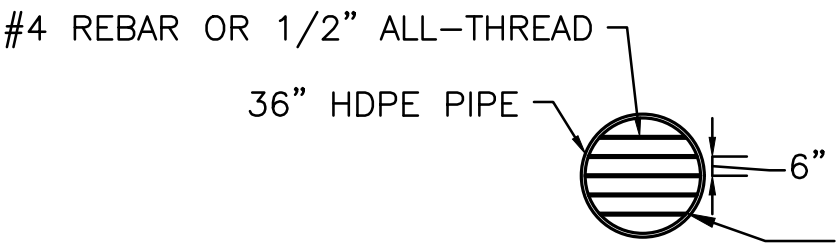

SECTION "A – A"

SECURE REBAR OR ALL–THREAD ON EXTERIOR OF PIPE WITH WELDED WASHERS, LOCK NUTS, OR OTHER APPROVED METHODS. DO NOT SET BARS VERTICALLY.

MAJOR INCIDENTALS: ALL ITEMS SHOWN.

SEE AML 40–20–11 FOR ADDITIONAL NOTES

STANDARD WILDLIFE ACCESSIBLE CLOSURE (AML 40-20-2)

GENERAL NOTES:

POLYURETHANE FOAM IS A SEPARATE BID ITEM. ALL OTHER MATERIALS, EQUIPMENT, AND LABOR ARE INCIDENTAL TO THE PORTAL CLOSURE BID ITEM.

POLYURETHANE FOAM NOTES:

1. REAR AND FRONT BARRIERS SHALL BE CONSTRUCTED FROM COMMON MATERIALS OR SHALL BE COMPRISED OF BAGGED FOAM PLACED IN LAYERS AND ALLOWED TO PARTIALLY HARDEN. THE ENGINEER MAY SUBSTITUTE CONSTRUCTED BULKHEADS WITH LOCAL OR COMMON MATERIALS.

2. THE VOID IN FRONT OF EACH SUCCESSIVE LAYER SHALL THEN BE FILLED WITH FOAM.

3. THE FOAM SEAL SHALL BE TIGHT ENOUGH TO SECURE THE ADIT, BUT IT DOES NOT HAVE TO BE AIR TIGHT.

4. THE ENGINEER WILL DETERMINE THE DEPTH OF FOAM REQUIRED IN THE FIELD.

5. THE FACE OF THE FINAL CLOSURE MUST BE COVERED WITH 2' OF EARTH OR ROCK, OR 2" OF GROUT. THE GROUT MUST BE TIED TO THE FACE USING PINS SET IN THE FOAM AND A WIRE MESH OVER THE FOAM FACE.

6. ALL PIPE IS INCIDENTAL REGARLESS OF LENGTH OR NUMBER OF SECTIONS REQUIRED.

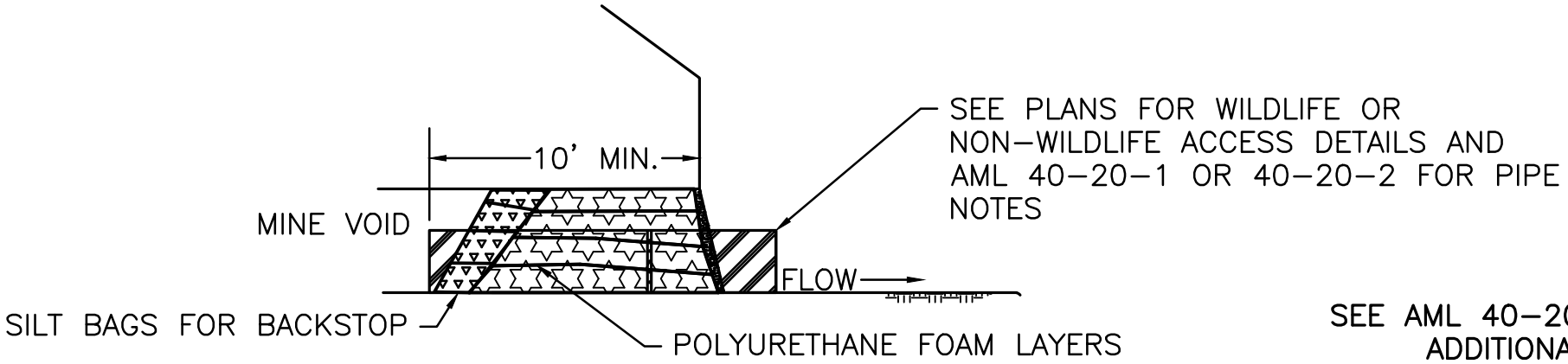

SEE AML 40-20-11 FOR ADDITIONAL DETAILS

STANDARD CLOSURES W/ POLYURETHANE FOAM (AML 40-20-3)

KY DAML 7-2017

NOTES:

THE ENGINEER WILL DETERMINE THE EXACT HEIGHT OF THE GABION WALL IN THE FIELD.

THE ENGINEER WILL DETERMINE THE NEED FOR A SURFACE DITCH AND/OR SUBDRAIN.

THE SURFACE DITCH, SUBDRAIN, GABION WALL ARE SEPARATE BID ITEMS.

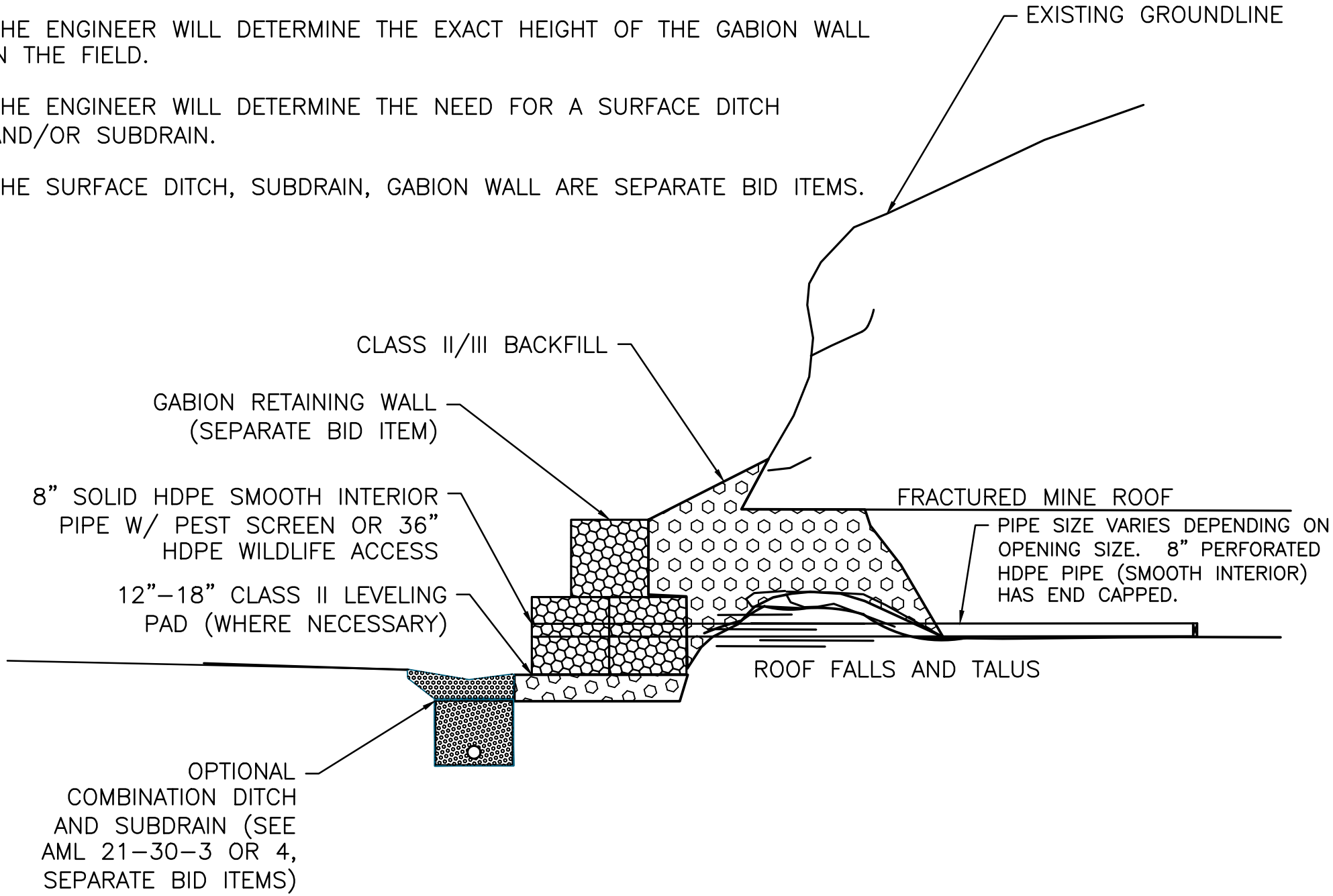

PORTAL CLOSURE W/ GABION RETAINING WALL (AML 40-20-4)

KY DAML 1–2013

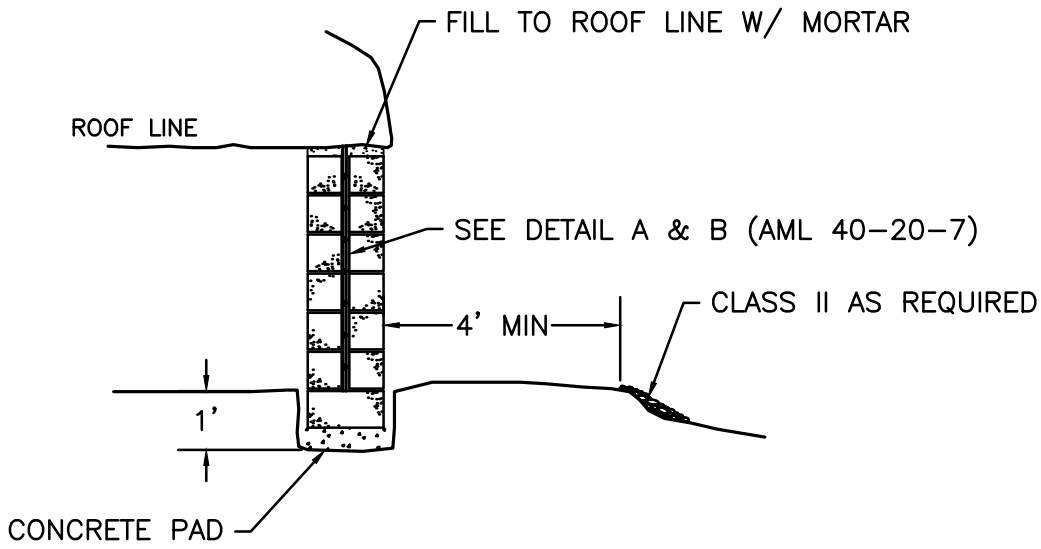

SECTION "A–A"

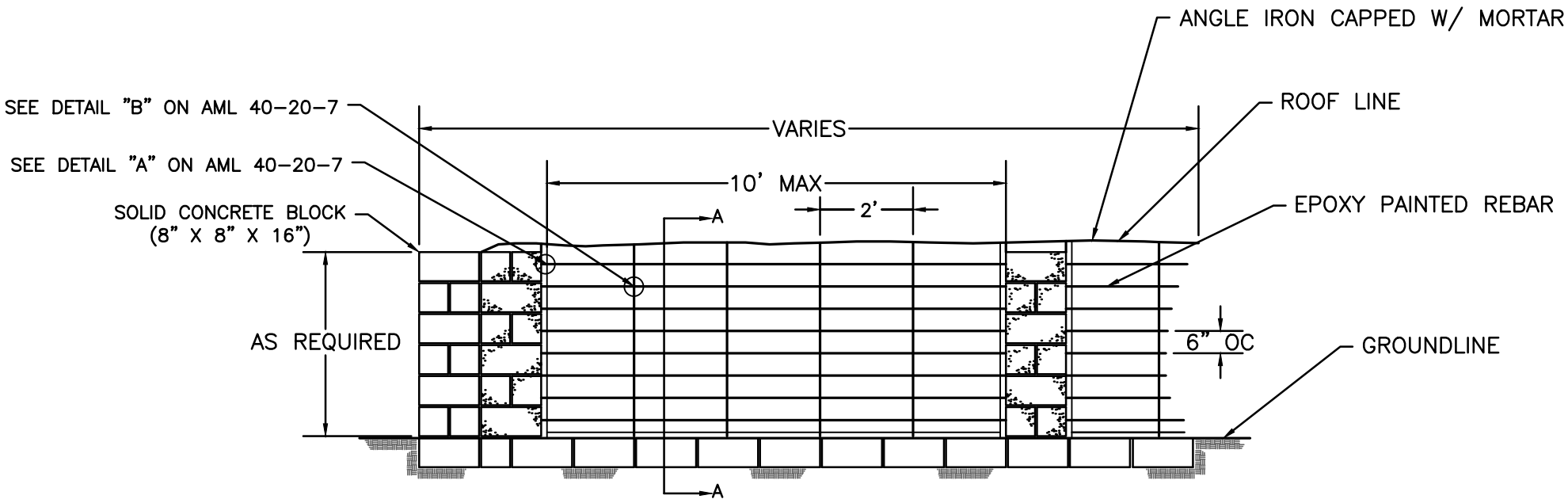

USE WITH AML 40–20–7 & 11

CLOSURE W/ EXTERIOR BARS IN CONCRETE BLOCK (AML 40-20-5)

KY DAML 1–2013

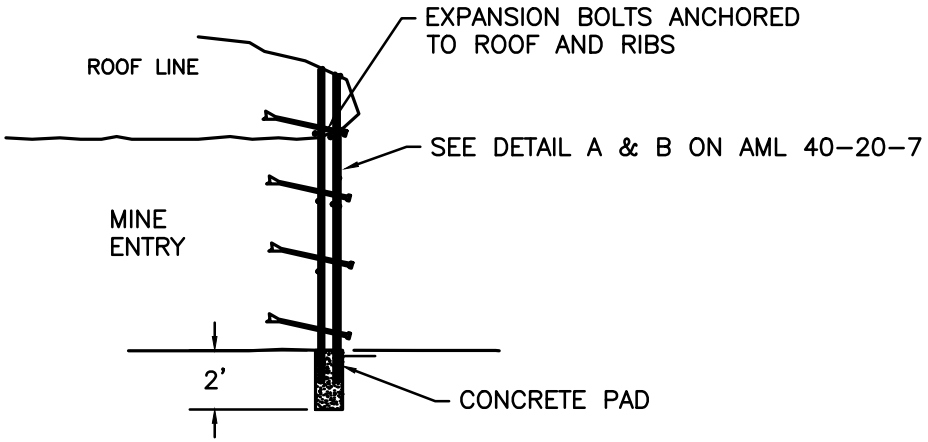

METHOD 1

USE FOR STABLE HIGHWALLS

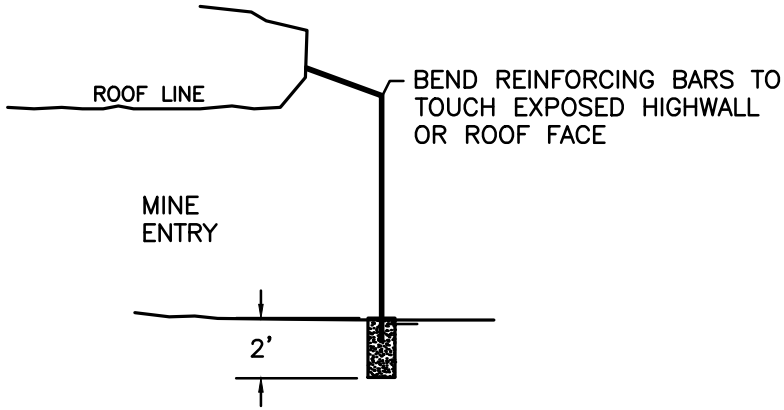

METHOD 2

USE FOR UNSTABLE HIGHWALLS

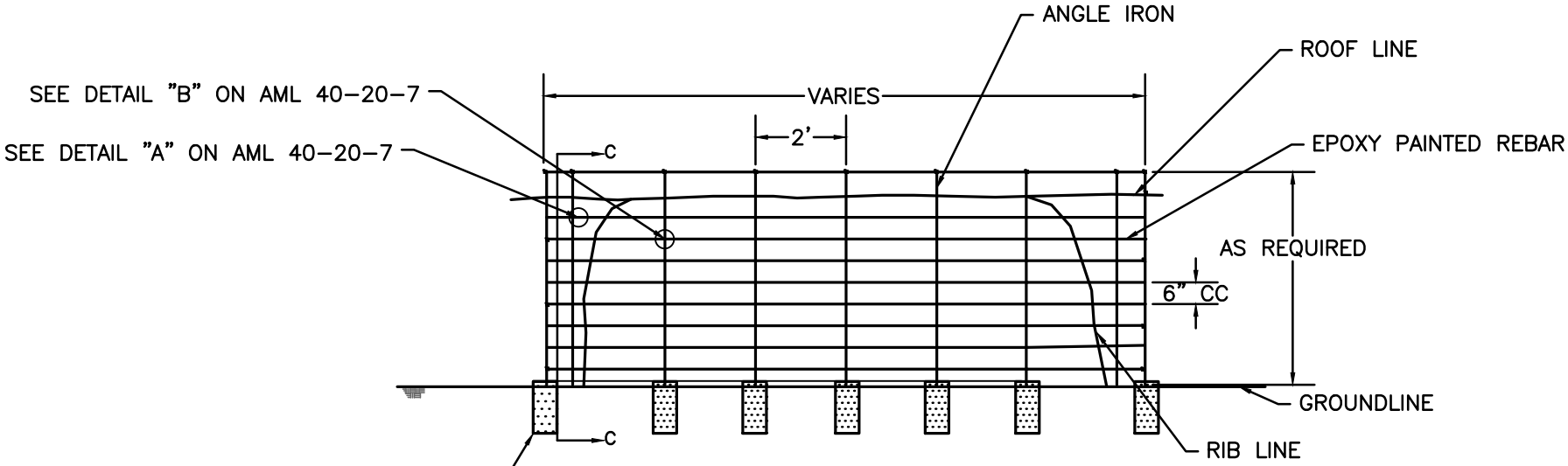

CONCRETE FILLED HOLES AS DIRECTED BY THE ENGINEER

A CONTINUOUS CONCRETE FOOTER MAY BE USED AS IN AML 40–20–5

SEE AML 40–20–5, 40–20–6, & 40–20–11

CLOSURE W/ EXTERIOR BARS SET IN CONCRETE (AML 40-20-6)

KY DAML 1–2013

NOTES:

1. ALL EXTERIOR EXPOSED SURFACES OF BLOCK, CONCRETE, REBAR, AND METAL DOORS SHALL BE PAINTED BLACK OR BROWN SO AS TO BLEND WITH SURROUNDINGS. ALL WELDS AND EXPOSED METAL SURFACES SHALL BE PAINTED WITH RUST INHIBITING PAINT.

2. THE EXTERIOR CAGE CLOSURE SHALL BE UTILIZED WHERE SOLID AND STABLE FACE–UPS ARE PRESENT WHICH WILL ENSURE THE LONGEVITY OF THE CLOSURE.

3. THE CAGE SHALL BE ANCHORED INTO SOLID STRATA WITH EXPANSION BOLTS, GUY WIRE ANCHORS OR EQUIVALENT. ALL BOLTS AND NUTS SHALL BE SPOT WELDED TO PREVENT REMOVAL.

4. DANGEROUS ROOF ROCK MAY BE PRESENT AT ALL PORTALS. NO PERSONNEL SHALL BE ALLOWED BENEATH ANY PORTAL WITHOUT PROPER STRUCTURAL ROOF SUPPORT. IN MOST CASES, PROPER SUPPORT CANNOT BE PROVIDED AND NO PERSONNEL SHALL ENTER INTO ANY PORTAL.

5. ALL OPENINGS SHALL BE A MAXIMUM OF 24" X 6".

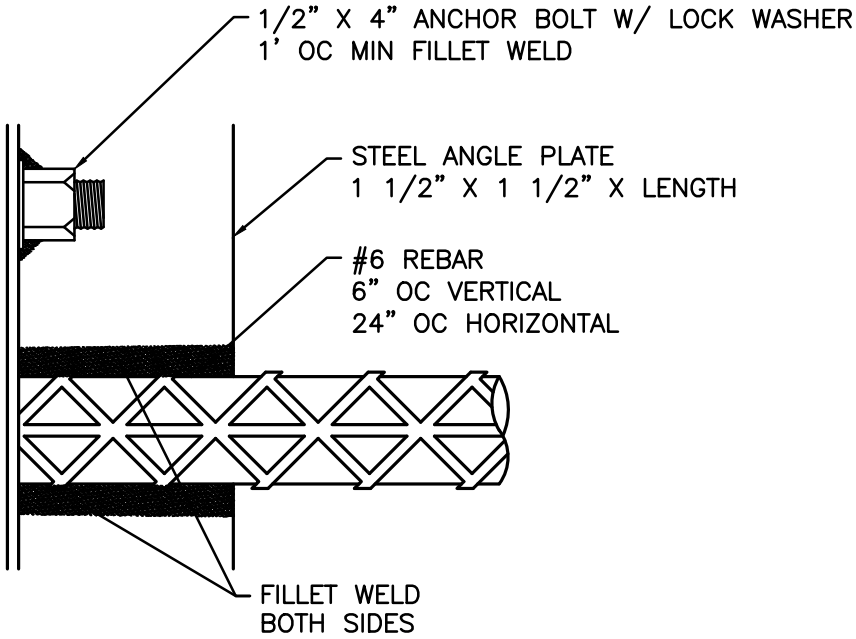

DETAIL A

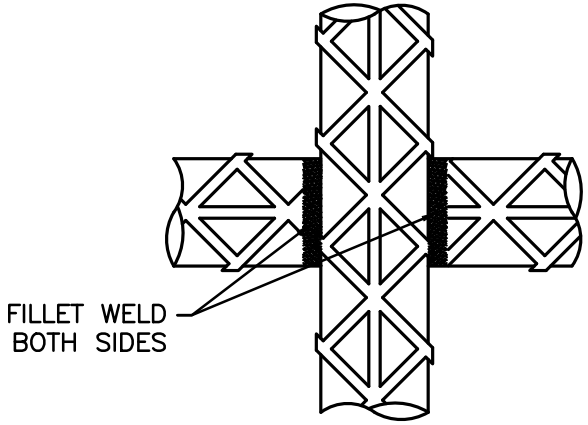

DETAIL B

USE WITH AML 40–20–5 & 6, 40–20–11

CLOSURE EXTERIOR BARS DETAILS (AML 40-20-7)

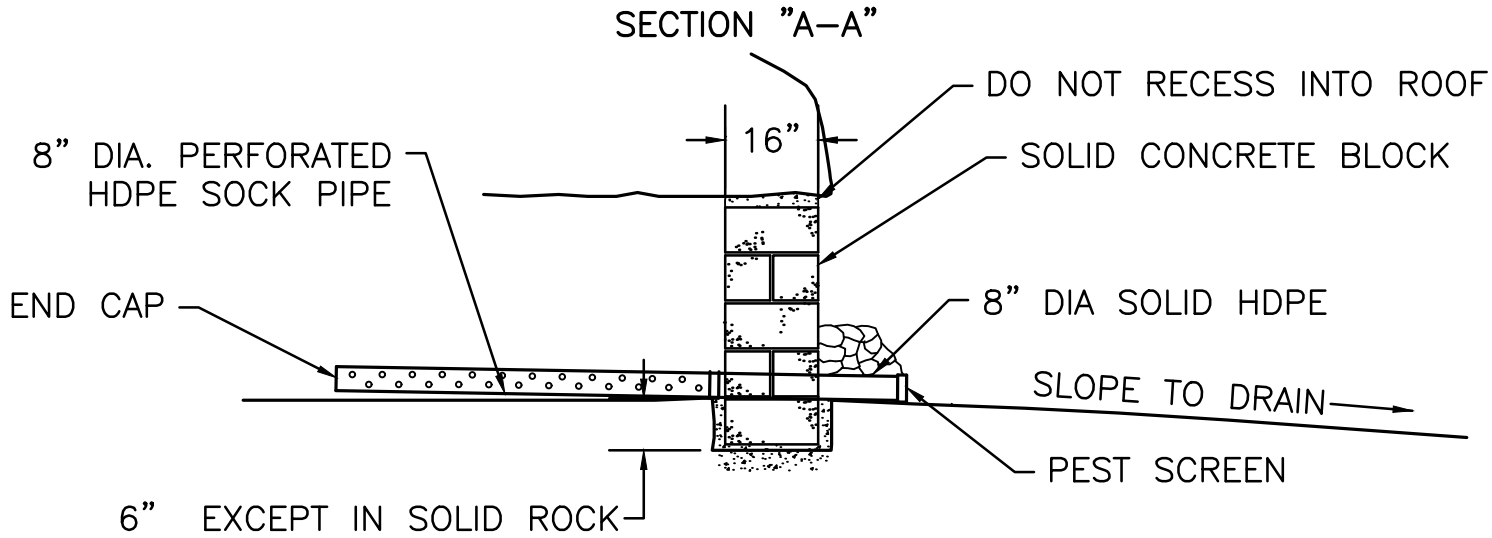

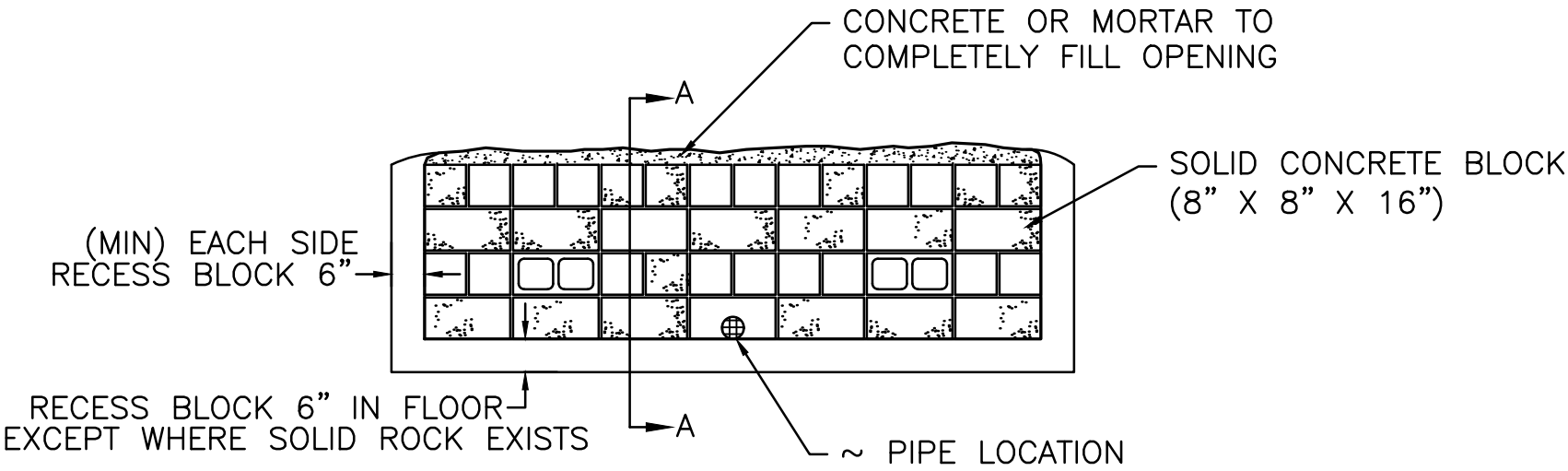

ALL ITEMS SHOWN ARE INCIDENTAL TO EACH CLOSURE

SEE AML 40–20–11 FOR ADDITIONAL NOTES

CONCRETE BLOCK CLOSURE (AML 40-20-8)

KY DAML 1–2013

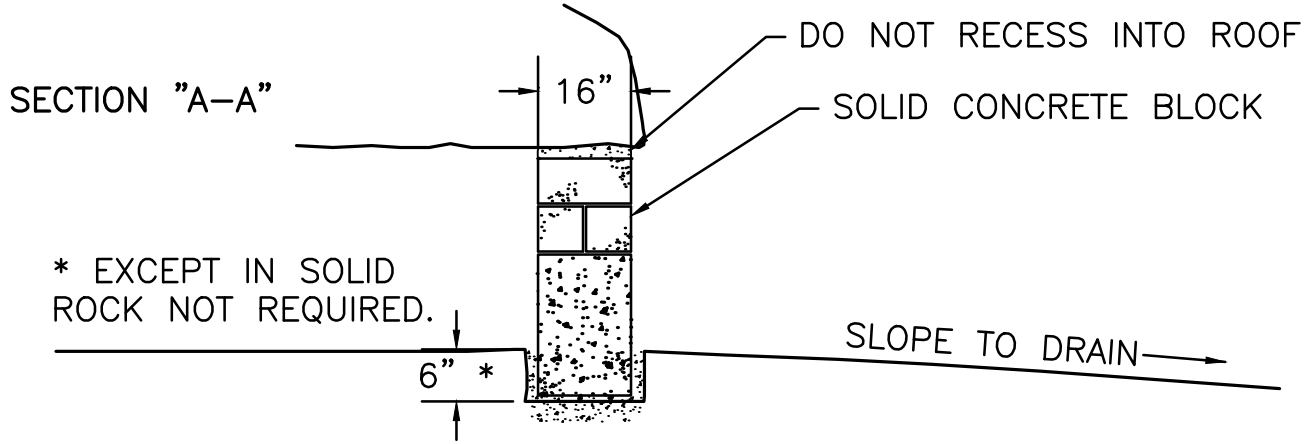

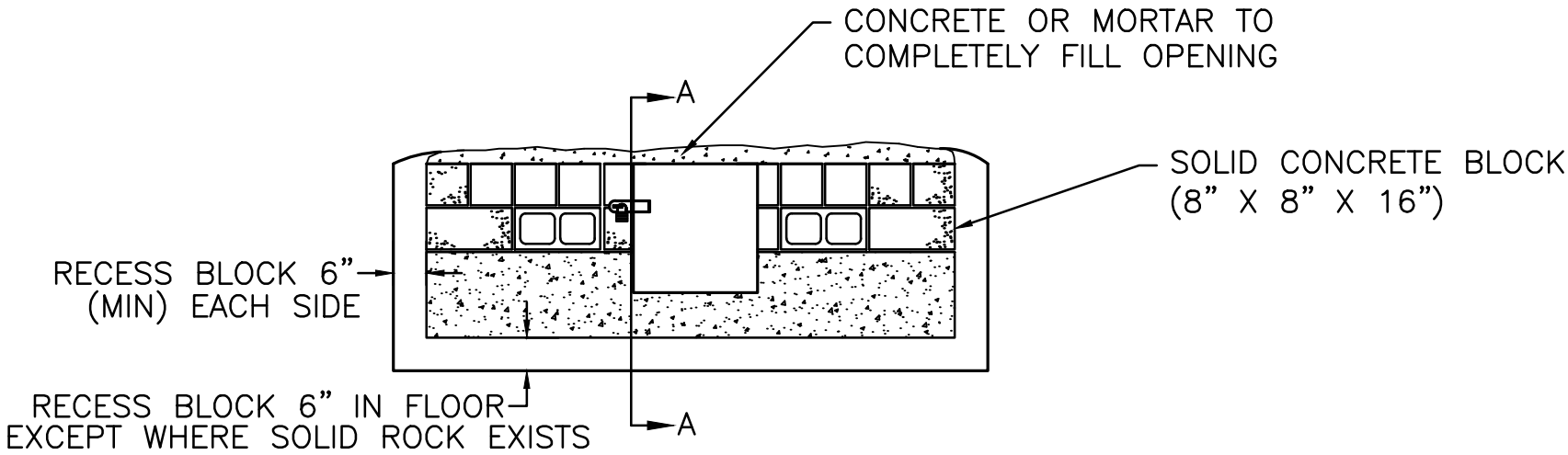

ALL ITEMS SHOWN ARE INCIDENTAL TO EACH CLOSURE.

SEE AML 40–20–11 FOR ADDITIONAL NOTES

CONCRETE BLOCK CLOSURE W/ HUMAN ACCESS (AML 40-20-9)

SUBDRAIN AND SURFACE DITCH ARE SEPARATE BID ITEMS.

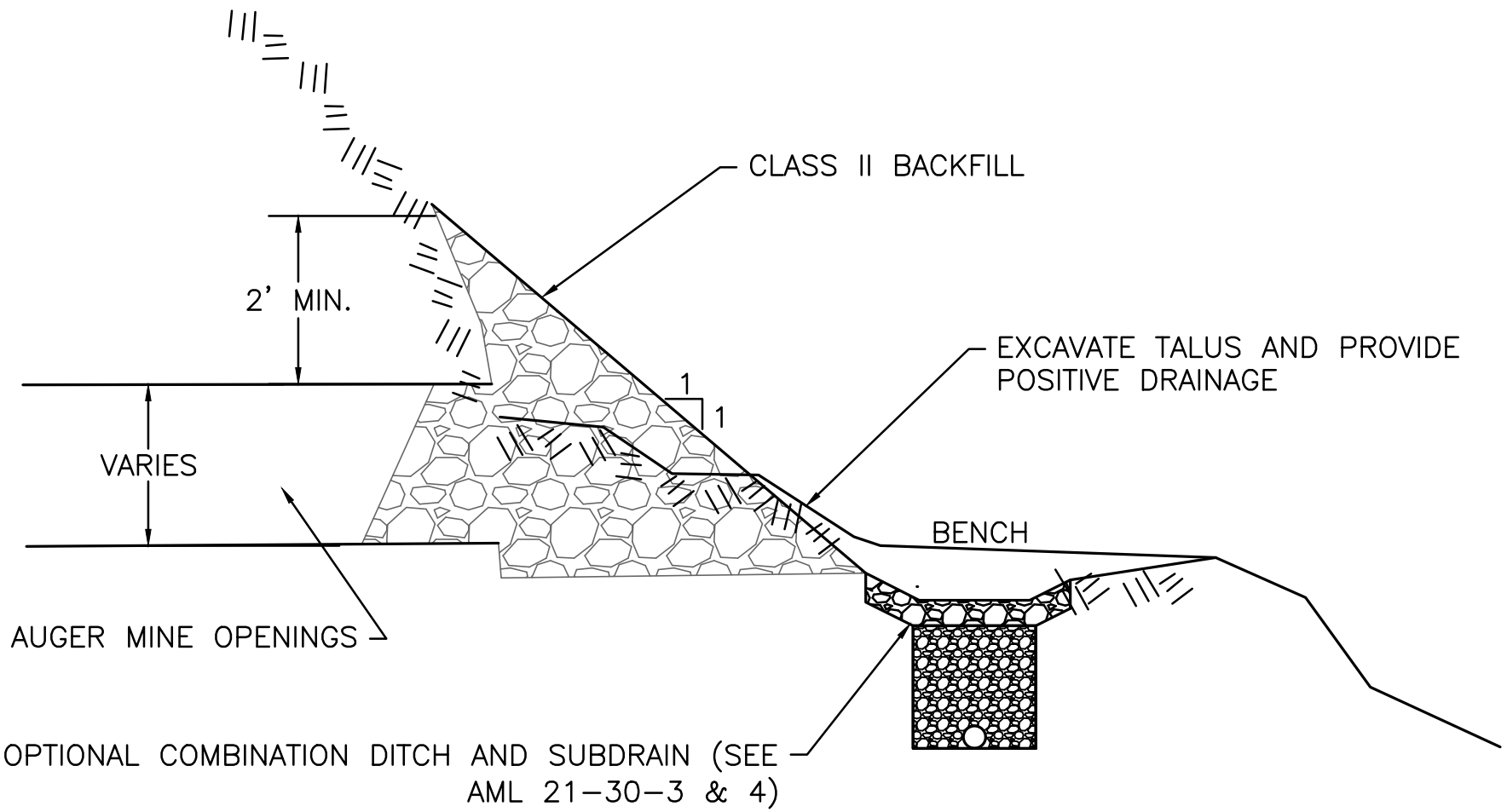

SEE AML 40-20-11 FOR ADDITIONAL NOTES

AUGUR CLOSURE W/ CLASS II BACKFILL (AML 40-20-10)

KY DAML 1-2013

PORTAL CLOSURE DESIGN & SAFETY REQUIREMENTS NOTES:

1. EXCAVATION EFFORTS SHALL BEGIN AT THE TOP MOST OF EACH DESIGNATED PORTAL CLOSURE AND PROCEED INCREMENTALLY DOWNWARD UNTIL ALL OF THE MATERIAL HAS BEEN REMOVED DOWN TO GRADE. AS EXCAVATION WORK PROCEEDS, THE CONTRACTOR SHALL BE WATCHFUL FOR THE PRESENCE OF MINE WATER. ANY MINE WATER DETECTED, SHALL BE IMMEDIATELY REPORTED TO THE ENGINEER AND EXCAVATION WORK HALTED UNTIL APPROVAL HAS BEEN GRANTED BY THE ENGINEER TO PROCEED FURTHER.

2. DANGEROUS ROOF ROCK MAY BE PRESENT AT ALL PORTALS. NO PERSONNEL SHALL BE ALLOWED BENEATH ANY PORTAL WITHOUT PROPER STRUCTURAL ROOF SUPPORT. IN MOST CASES, PROPER SUPPORT CANNOT BE PROVIDED AND NO PERSONNEL SHALL ENTER INTO ANY PORTAL.

3. BLACK DAMP OR OTHER DANGEROUS VENTILATION / GAS CONDITIONS MAY BE PRESENT. THE CONTRACTOR MUST TAKE EVERY PRECAUTION AND UTILIZE QUALIFIED PERSONNEL TO ENSURE THE SAFETY OF HIS WORKERS AND THE PUBLIC.

4. ALL PORTALS BEING USED AS A WATER SOURCE SHALL BE MAINTAINED AS A WATER SOURCE BY GROUTING TO CREATE A RESERVOIR IN THE MINE. AN END CAP WITH APPROPRIATE FITTINGS SHALL BE PLACED OVER THE END OF THE HDPE. PROVISIONS FOR A SUPPLY LINE OUTLET SHALL BE MADE IN THE POURED CONCRETE BASE AT A LOCATION DETERMINED BY THE ENGINEER.

5. ALL COARSE AGGREGATE, CLASS II, OR PNEUMATICALLY BACKSTOWED AGGREGATE SHALL BE INCIDENTAL TO THE PORTAL CLOSURE. GROUT SHALL BE USED TO SURFACE SEAL ALL SURFACES AS REQUIRED BY THE ENGINEER AND SHALL BE INCIDENTAL TO THE PORTAL CLOSURE.

6. ALL EXTERIOR EXPOSED SURFACES OF BLOCK, CONCRETE, REBAR, AND METAL DOORS SHALL BE PAINTED BLACK OR BROWN SO AS TO BLEND WITH SURROUNDINGS. ALL WELDS AND EXPOSED METAL SURFACES SHALL BE PAINTED WITH RUST INHIBITING PAINT.

7. IF ROOF LINE IS UNSTABLE THEN CAP REBAR WITH APPROPRIATE LENGTH OF 2 1/2" x 2" x 3/8" STEEL ANGLE AND FILL TO ROOF LINE WITH MORTAR.

8. THE ACCESS DOOR IS TO BE USED WHERE THE MINE IS A WATER SOURCE OR AS DIRECTED BY THE ENGINEER. DOOR SIZE MAY DEPEND ON SIZE OF MINE OPENING.

9. 8" DIAMETER HDPE DUAL WALL PIPE SHALL BE USED UNLESS 12" IS REQUIRED BY THE ENGINEER. THE ENGINEER MAY REQUIRE A 12" PIPE IN WET PORTALS (INCIDENTAL).

10. A CONCRETE FOOTING SHALL BE CONSTRUCTED WHERE REQUIRED TO PROVIDE A SUITABLE LEVEL BASE FOR THE BLOCK WALL. CONCRETE SHALL BE 3,500 PSI.

CLOSURE GENERAL NOTES (AML 40-20-11)

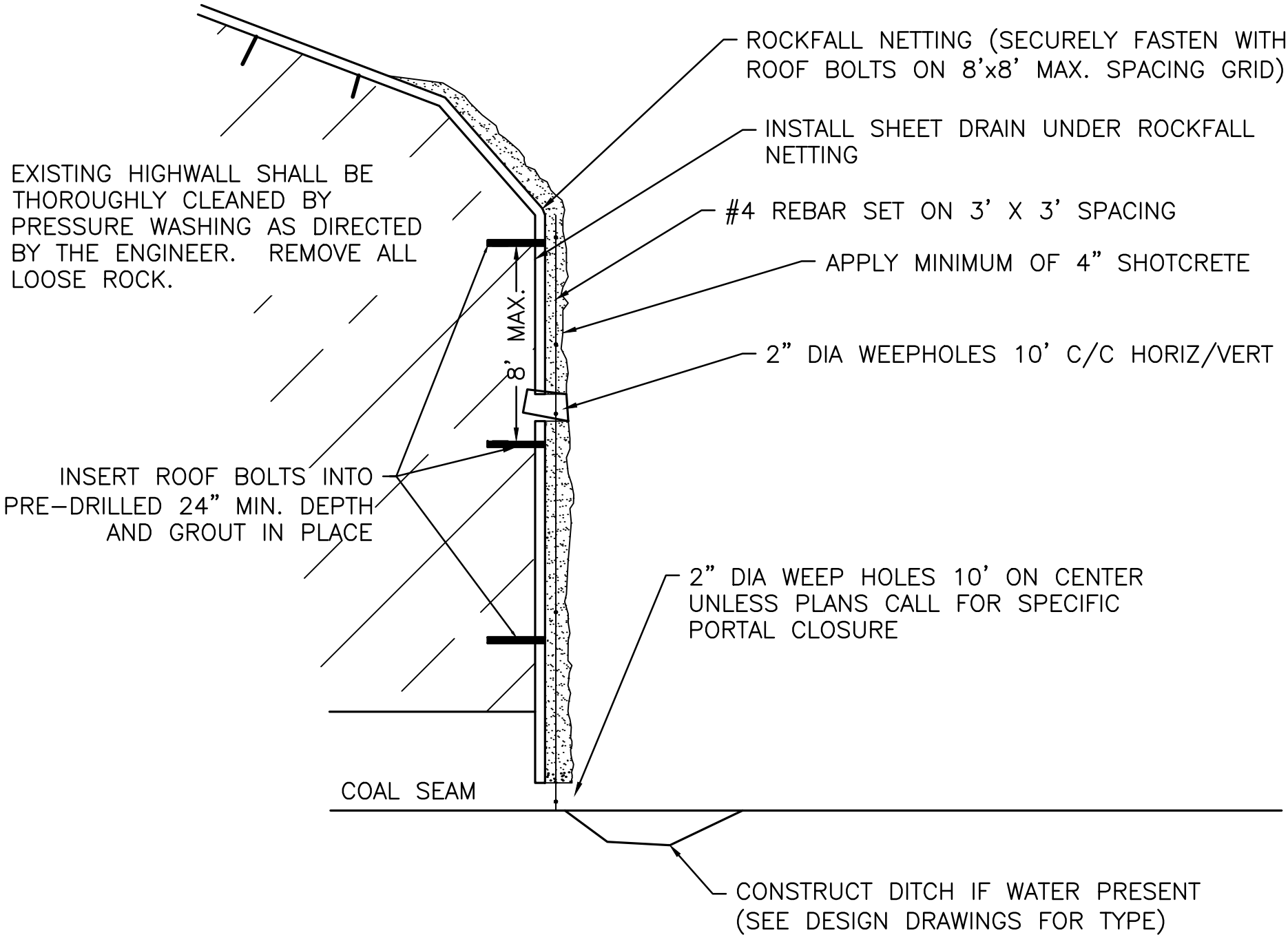

HIGHWALL RESTORATION (AML 40-30-1)

KY DAML 1-2013

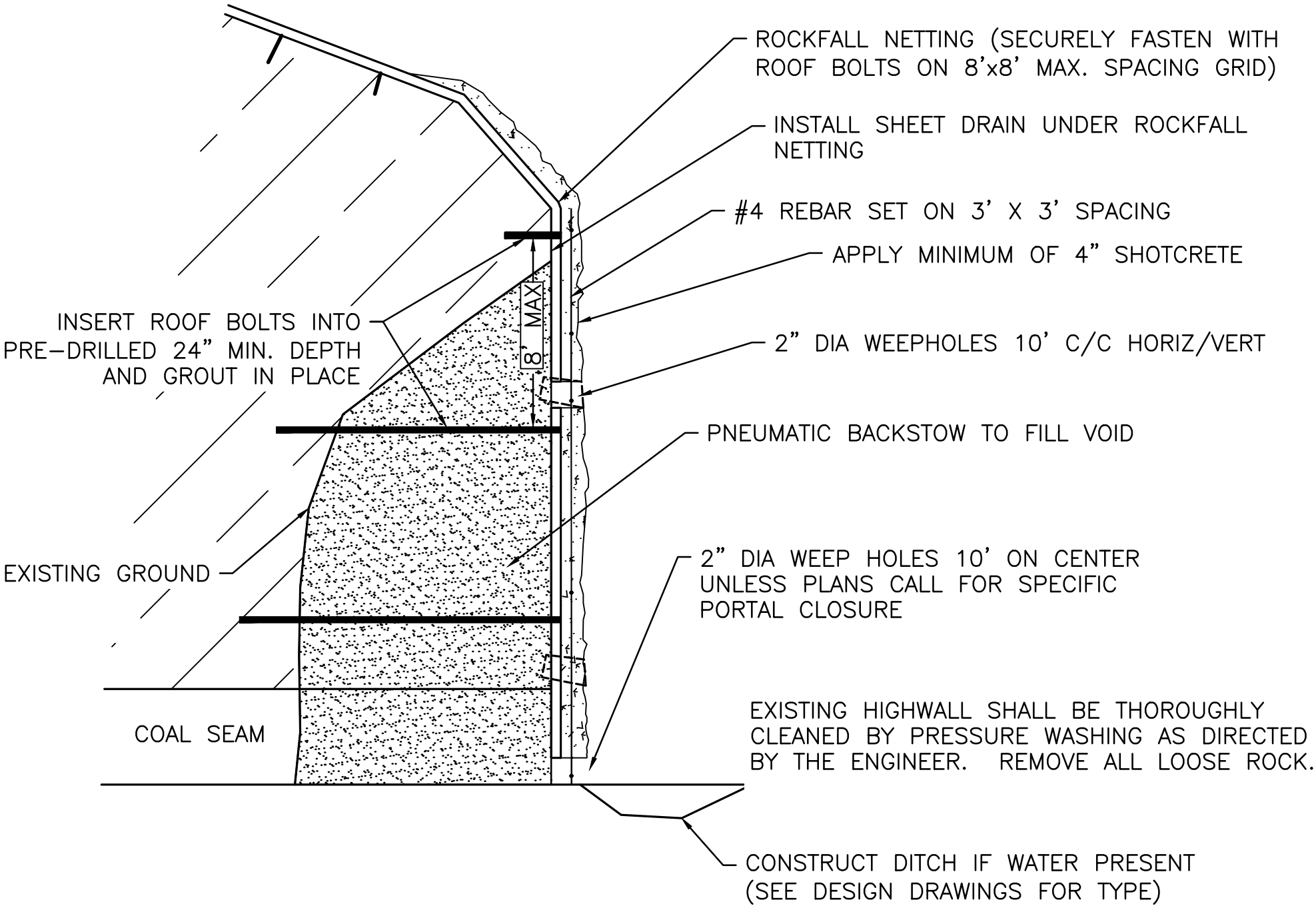

HIGHWALL RESTORATION FOR DANGEROUS OVERHANGS (AML 40-30-2)

KY DAML 1-2013

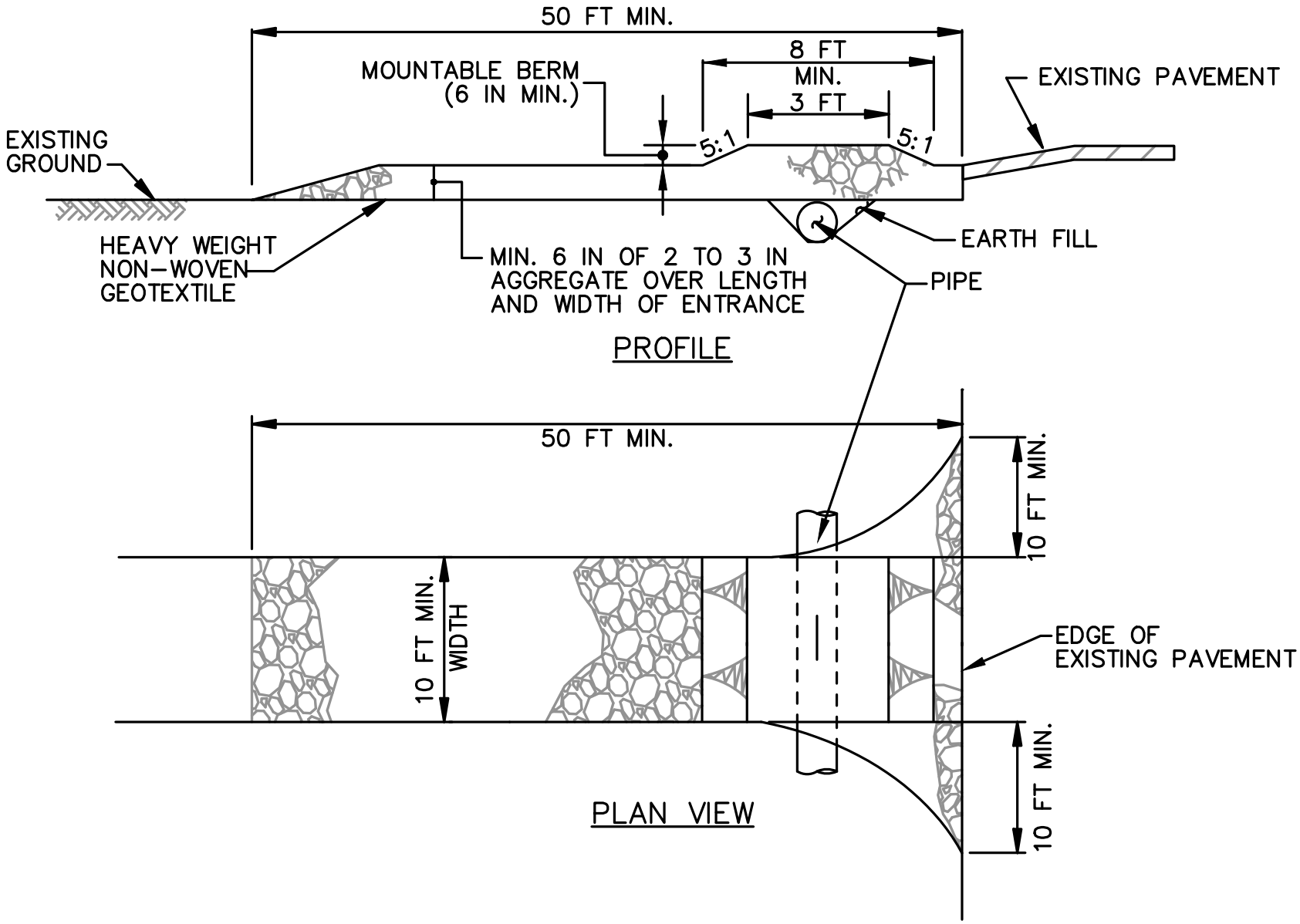

STABLILIZED CONSTRUCTION ENTRANCE (AML 50-10-1)

KY DAML 1-2013

CAST IN PLACE UNITS

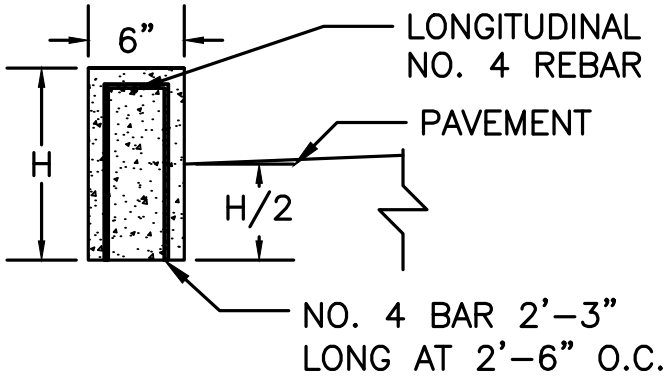

L= STANDARD LENGTHS OF THE INDEPENDENT UNITS ARE 2'-0", 4'-0", 6'-0", AND 8'-0".

1. NO. 5 BARS- 1'-6" MIN. LENGTH. FILL VOID WITH COMMERCIAL GRADE BUTYL RUBBER CAULKING.
2. NO. 3 DEFORMED BARS (OR LARGER) 2 REQUIRED.
3. PRE-CAST UNIT WEIGHTS ARE APPROXIMATELY 38 LBS/LF.
4. LEAVE 6-8" SPACE BETWEEN SECTIONS WHEN INSTALLED BETWEEN ROADWAY AND DITCH.

PRE-CAST UNITS

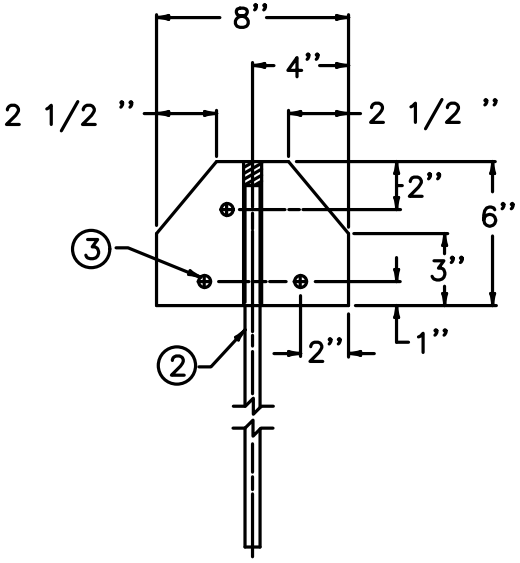

END VIEW

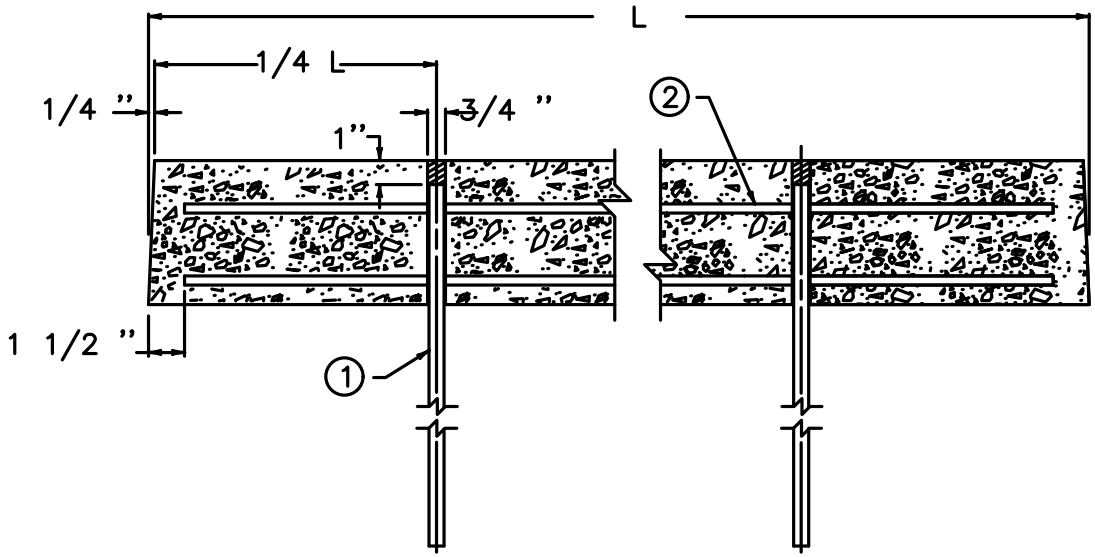

SECTIONAL ELEVATION

CURB BARRIERS (AML 50-10-2)

KY DAML 1-2013

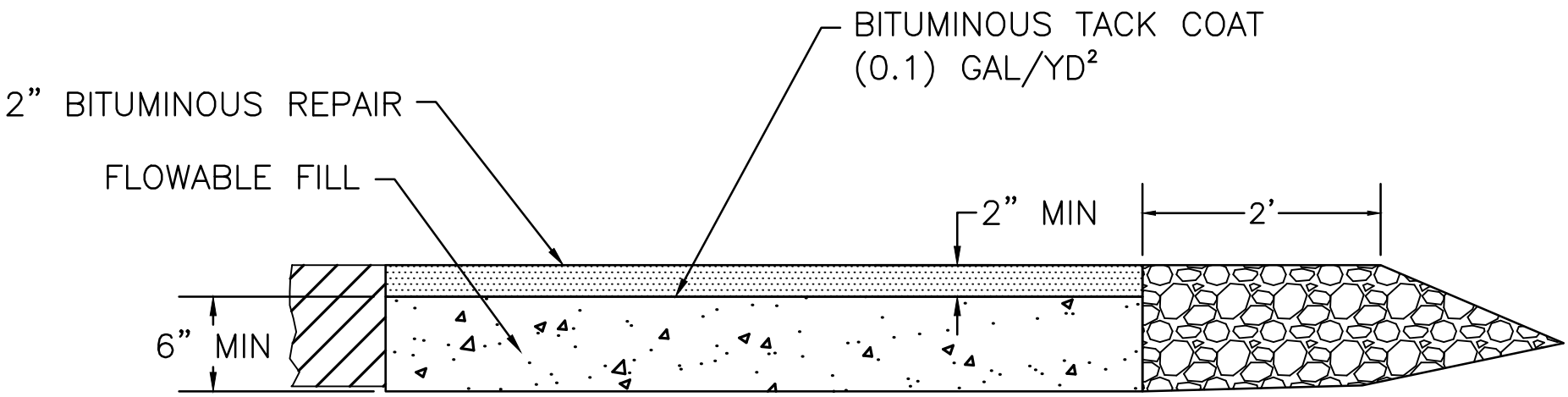

FLOWABLE FILL SHALL BE USED ON ALL PAVED ROADS.

BITUMINOUS PAVEMENT RESTORATION (AML 50-10-3)

KY DAML 1-2013

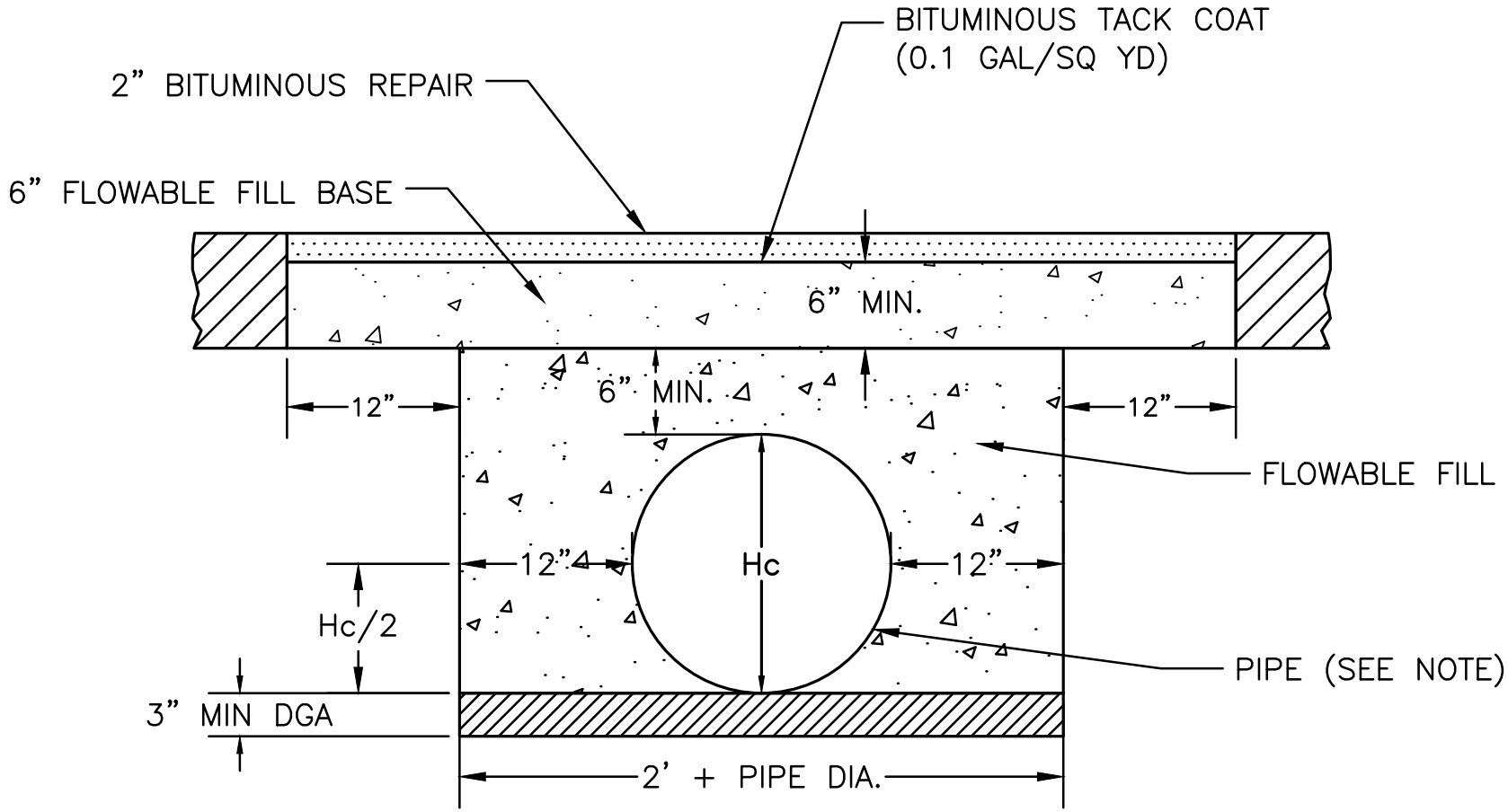

PIPE NOTE:
RCP OR RHDPE (DUAL WALL REINFORCED HIGH DENSITY POLYETHYLENE) FOR PIPE ≥30" DIA.
RCP OR DWPP (DUAL WALL POLYPROPROPYLENE) FOR PIPES ≤30" DIA.
HDPE (DUAL WALL HIGH DENSITY POLYETHYLENE) SHALL NOT BE USED UNDER PUBLIC ROADS

PROVIDE STEEL PLATING TO COVER TRENCH UNTIL PAVEMENT REPAIRED (INCIDENTAL TO PIPE INSTALLATION).

BITUMINOUS PAVEMENT RESTORATION W/PIPE (AML 50-10-4)

KY DAML 7–2017

NOTES:
USE HINGES, LATCH, CHAIN, AND LOCK AS RECOMMENDED BY THE GATE MANUFACTURER AND APPROVED BY THE ENGINEER (INCIDENTAL).

A MINIMAL AMOUNT OF FENCE SHALL BE REQUIRED ON EITHER SIDE OF THE GATE AS DIRECTED BY THE ENGINEER. FENCE AND ALL HARDWARE SHALL BE CONSIDERED INCIDENTAL TO THE CONSTRUCTION OF THE GATE.

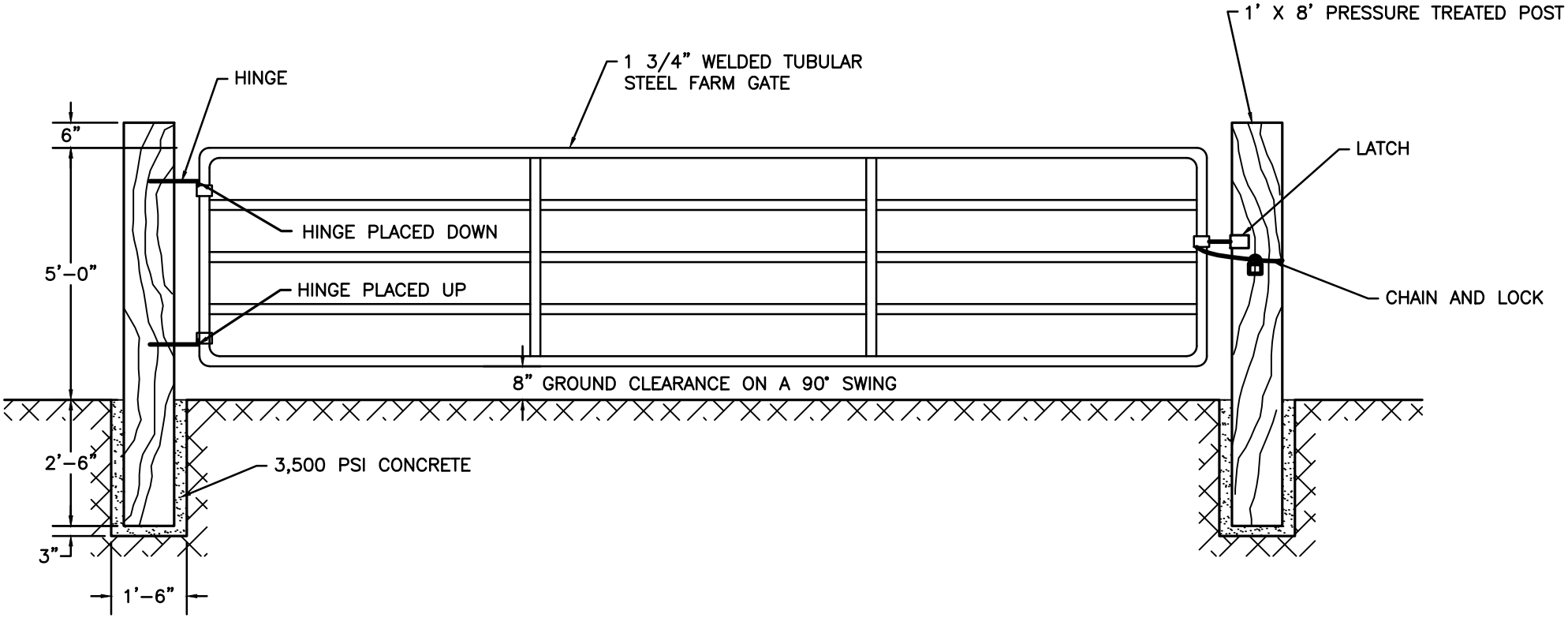

ACCESS GATE - 16' STEEL TUBE (AML 50-10-5)

KY DAML 1-2013

BLOCKS MUST HAVE INTERLOCKING PATTERN AND WEIGHT AT LEAST 10 LBS PER BLOCK

THE CONCRETE HEADER EXTENDS TO AT LEAST 2' BELOW THE TOP OF THE BLOCK.

ENGINEER MAY ELECT TO ADD CONCRETE FOOTER TO CROSSING DESIGN. USE SAME DIMENSION AS HEADER ANCHOR.

ENGINEER MUST PRE-APPROVE BLOCK MATERIAL PRIOR TO DELIVER TO SITE. ALL BLOCKS MUST INTERLOCK ON ALL SIDES.

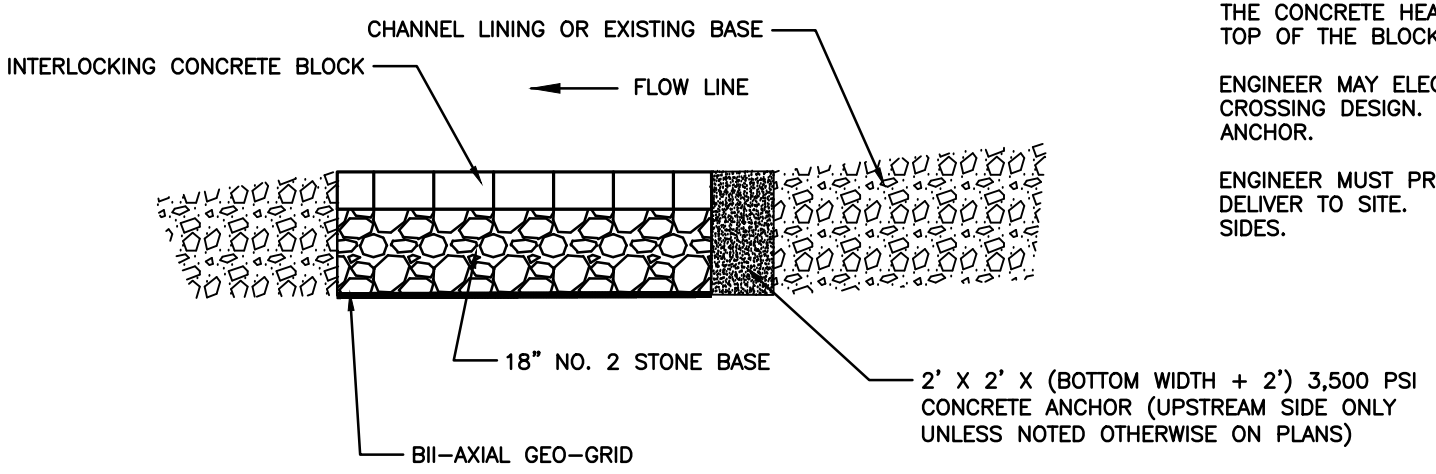

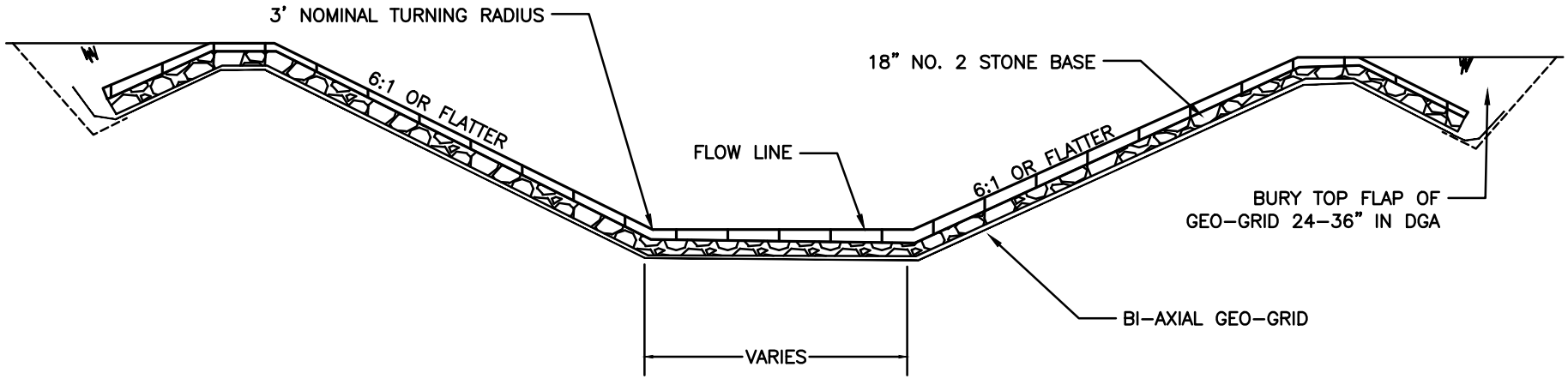

CONCRETE BLOCK- INTERLOCKING MAT (AML 50-10-6)

KY DAML 7-2013

Guidelines for Low Water Crossing

1. There shall be a maximum fill height of four and one-half (4½) feet measured from the channel bottom to the top of the proposed crossing.
2. The pipes used for the proposed crossing shall not be less than 24” in diameter or more than 36” in diameter.
3. There shall not be more than one (1) foot spacing between the pipes measured between the outside edges of the pipes.
4. As many pipes as possible shall be placed within the stream banks.
5. Fill material used to cover the pipes shall be composed entirely of clean rock or concrete. No soil shall be allowed in the fill.
6. All pipes shall be laid flush with the bottom of the stream channel.
7. The maximum cover over the top of the pipe shall not be greater than eighteen (18) inches.

Standard Drawing

Not to Scale

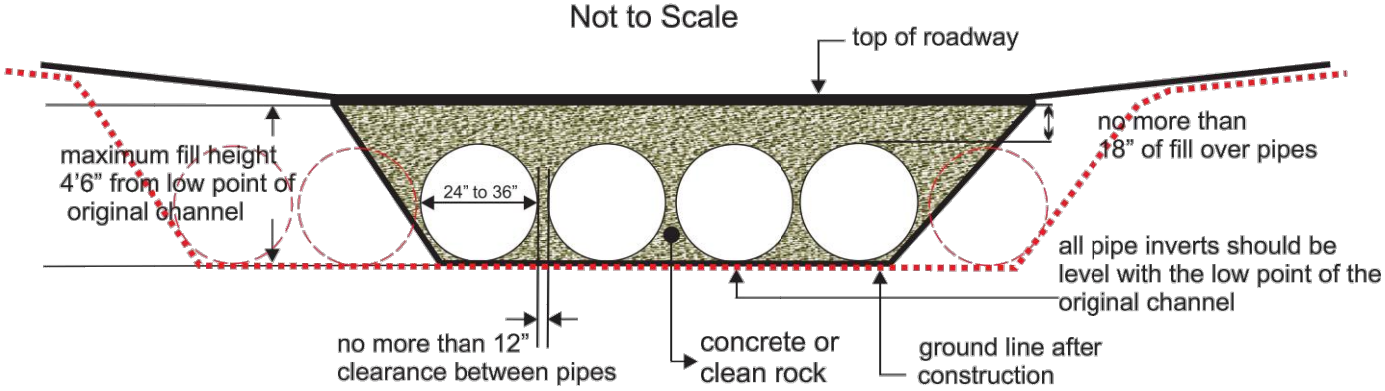

Notes:

1. This is a conceptual drawing. The number and size of pipes and other details will vary depending on specific site conditions.
2. The pipes and backfill must be contained within the stream channel as shown above. During the construction of the approaches and access roadway across the floodplain, unstable and unconsolidated materials unsuitable for roadways may be excavated and replaced with riprap, crushed stone, or other stable road construction materials. This may only be done, however, with the following provisions: (1) the disposal of excess, unconsolidated materials thus excavated must be outside of the floodplain and (2) the finished surface of the completed road may be no more than three inches (3”) above the pre-construction surface of the floodplain at any point beyond the top of banks.

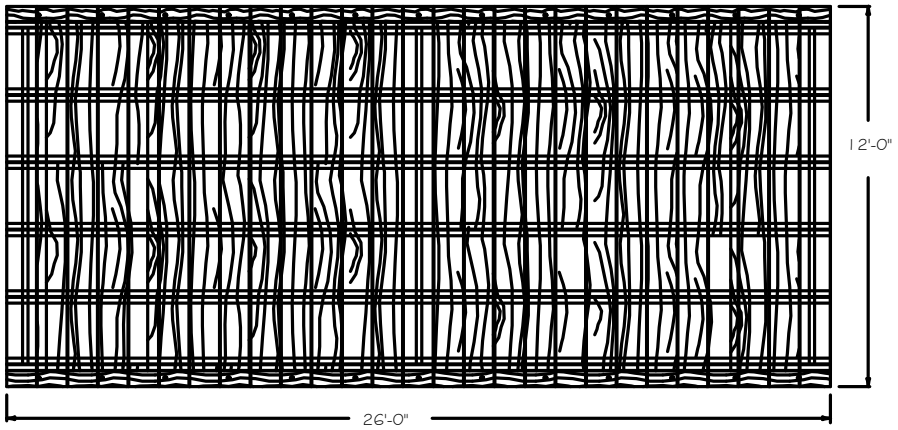

PLAN VIEW

NOTES:

1. TYPES OF TEMPORARY BRIDGES OTHER THAN THE I-BEAM BRIDGE SHOWN HERE MUST BE APPROVED BY THE ENGINEER.
2. UNLESS OTHERWISE SPECIFIED THE STRUCTURE SHALL BE DESIGNED FOR AN H-10 LOADING.
3. REMOVE AT END OF CONTRACT.

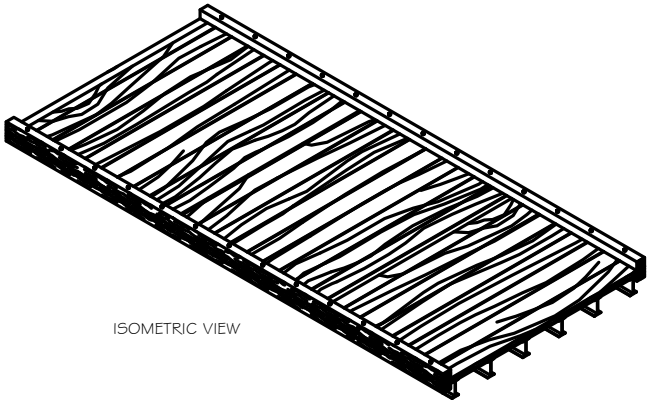

ISOMETRIC VIEW

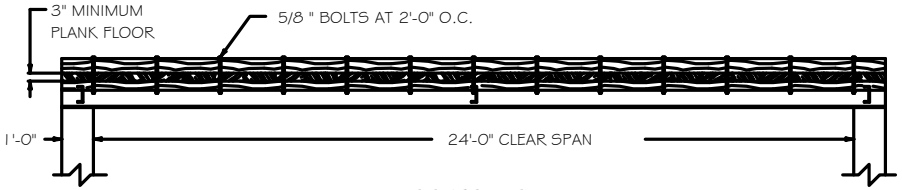

ELEVATION VIEW

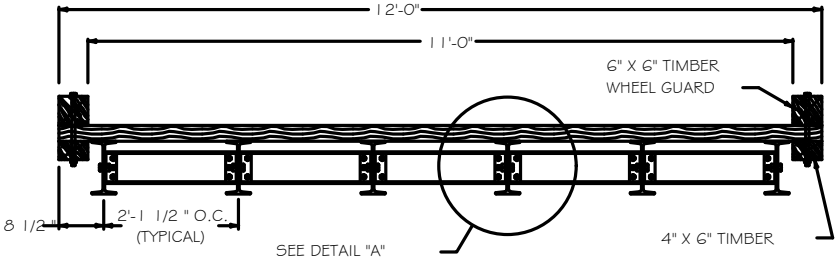

TYPICAL SECTION

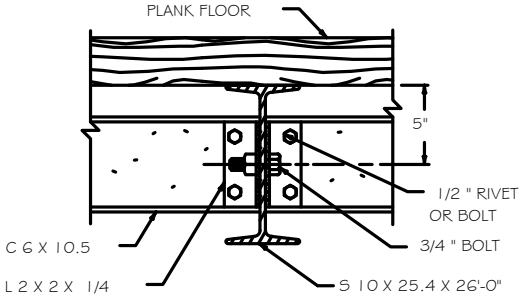

DETAIL "A"

TEMPORARY ACCESS BRIDGE (AML 50-10-8)

KY DAML 1-2013

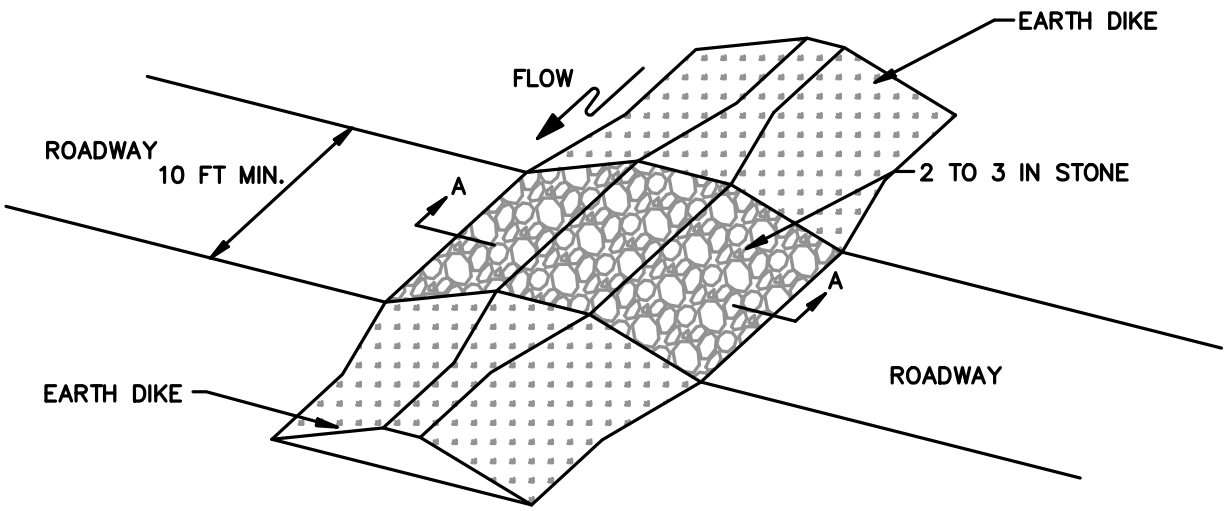

ISOMETRIC VIEW

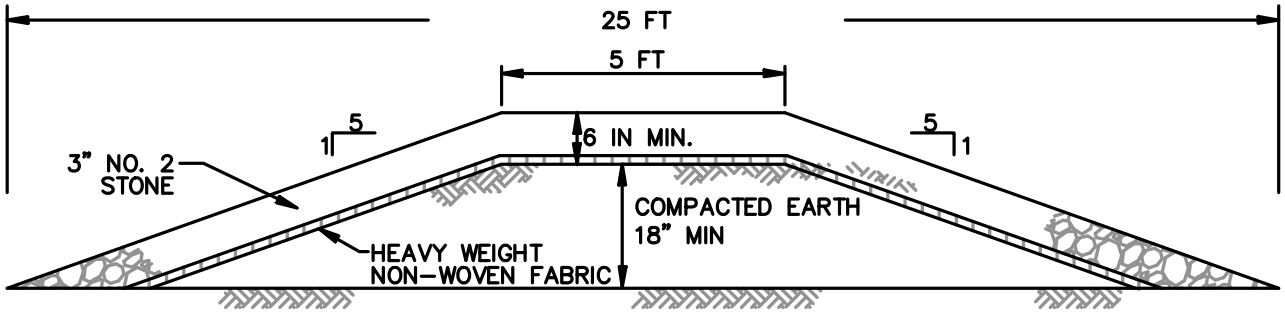

SECTION A–A

CONSTRUCTION SPECIFICATIONS

1. USE MINIMUM WIDTH OF 10 FEET TO ALLOW FOR VEHICULAR PASSAGE.
2. PLACE HEAVY WEIGHT NONWOVEN GEOTEXTILE OVER THE EARTH MOUND PRIOR TO PLACING STONE.
3. PLACE 3" NO. 2 STONE OVER THE LENGTH AND WIDTH OF THE MOUNTABLE BERM.
4. MAINTAIN LINE, GRADE, AND CROSS SECTION. ADD STONE OR MAKE OTHER REPAIRS AS CONDITIONS DEMAND TO MAINTAIN SPECIFIED DIMENSIONS. REMOVE ACCUMULATED SEDIMENT AND DEBRIS. MAINTAIN POSITIVE DRAINAGE.

MOUNTABLE BERM (AML 50-10-9)

KY DAML 4–2014

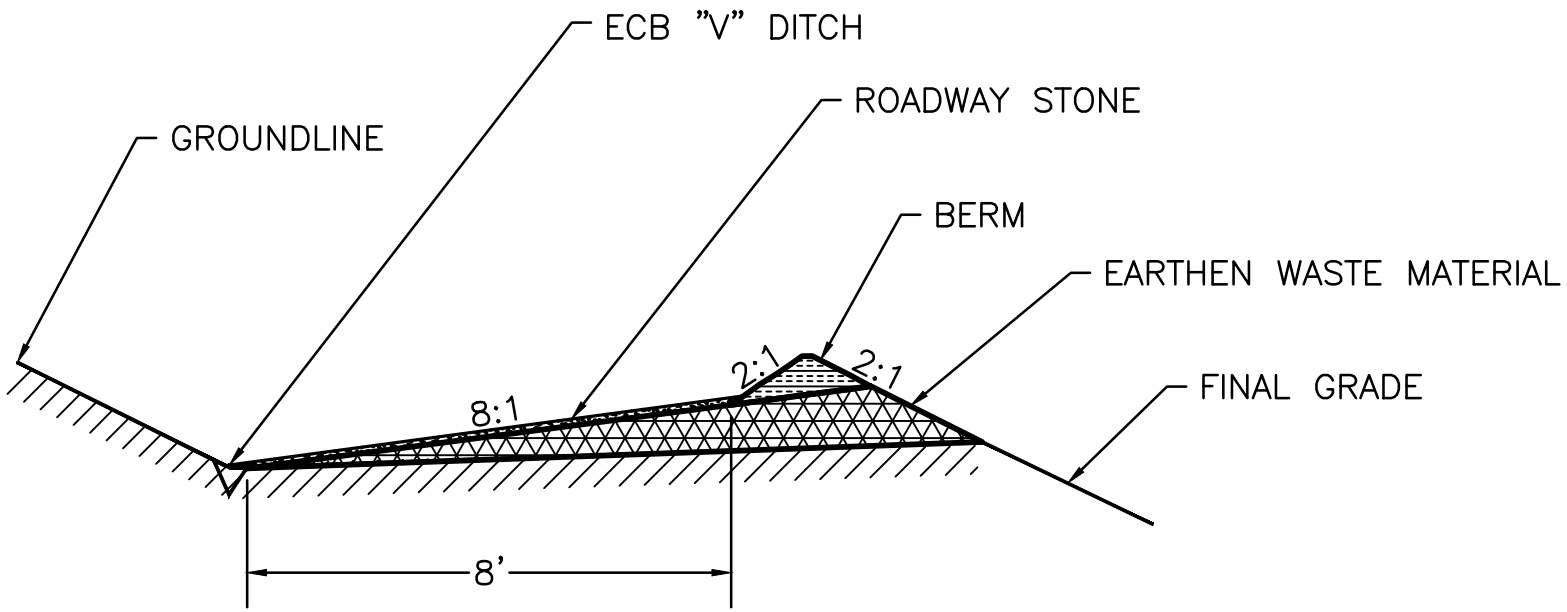

ACCESS ROAD (AML 50-10-10)

KYDAML 4-2014

DEBRIS AND OTHER MATERIALS SHALL NOT BE PERMITTED TO BUILD UP ON THE STRUCTURE. ALL MATERIALS SHALL BE IMMEDIATELY REMOVED AND TRANSPORTED TO A LOCATION AS DIRECTED BY THE ENGINEER. ALL SUCH WORK SHALL BE INCIDENTAL.

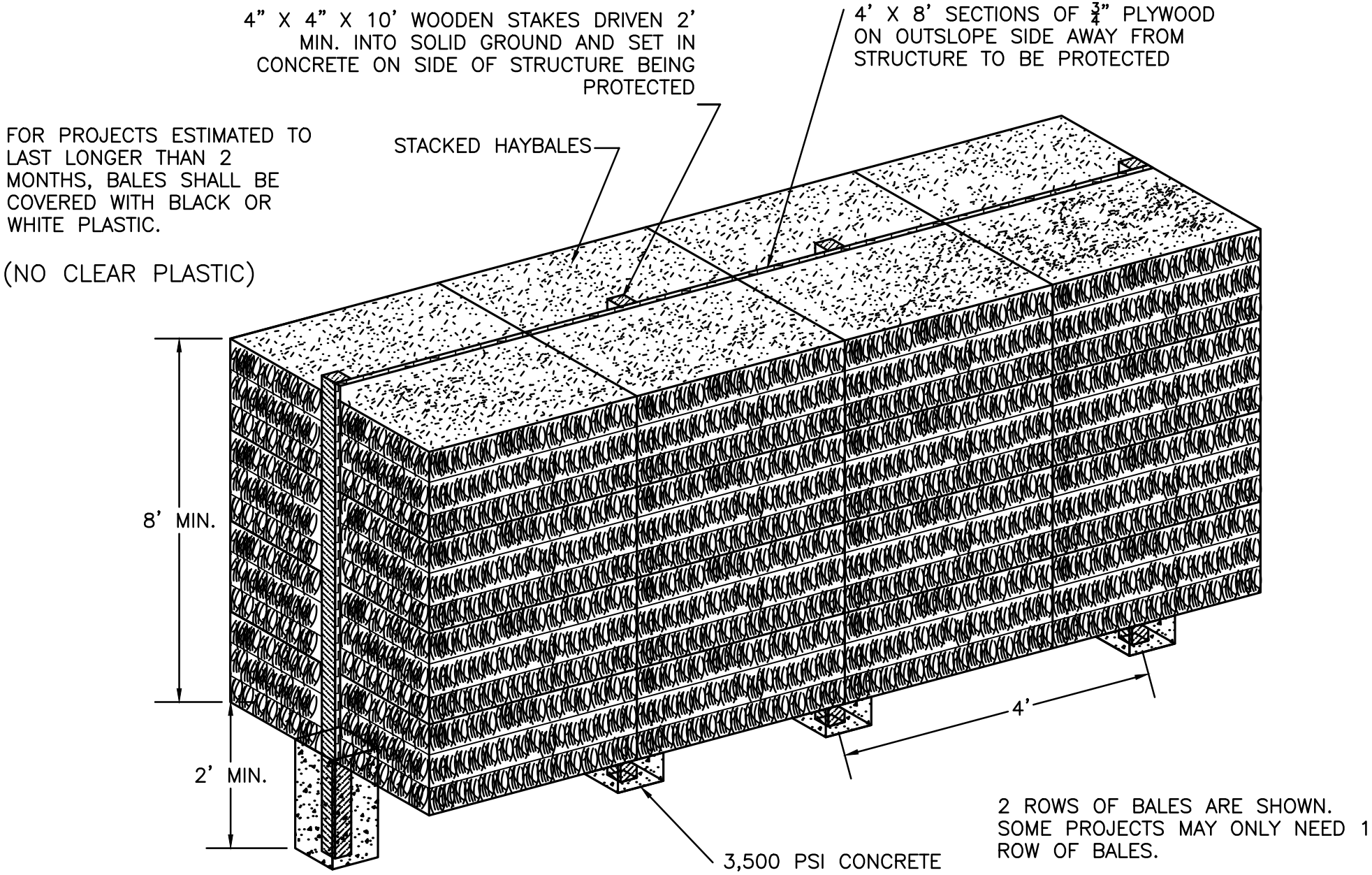

DEBRIS BARRIER WALL - BALE & PLYWOOD (AML 50-20-1)

KY DAML 1-2013

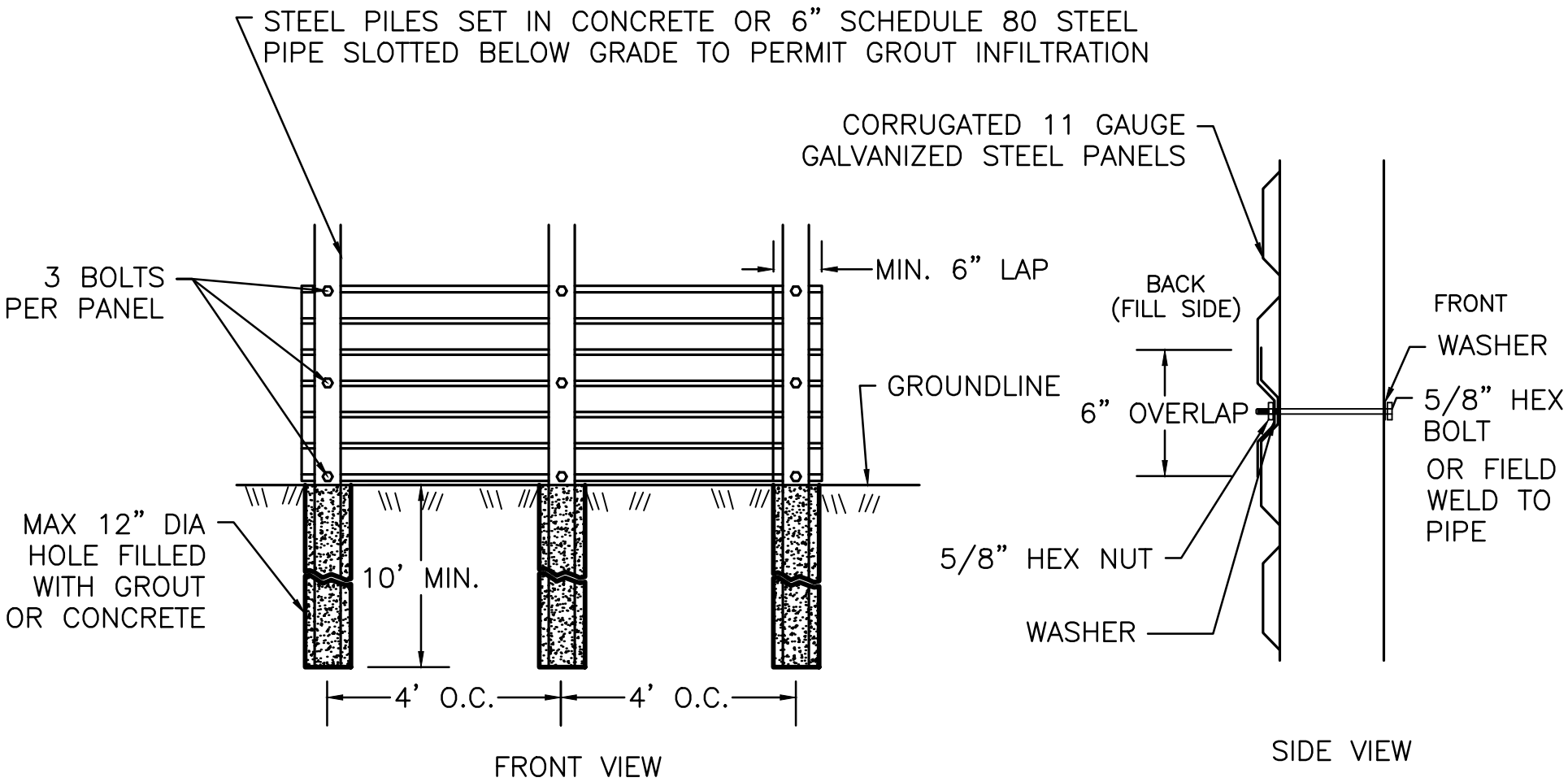

FINISHED STEEL PANEL SIZE – 3.75' X 10'

DEBRIS BARRIER WALL- PERMANENT (AML 50-20-2)

KY DAML 10–2015

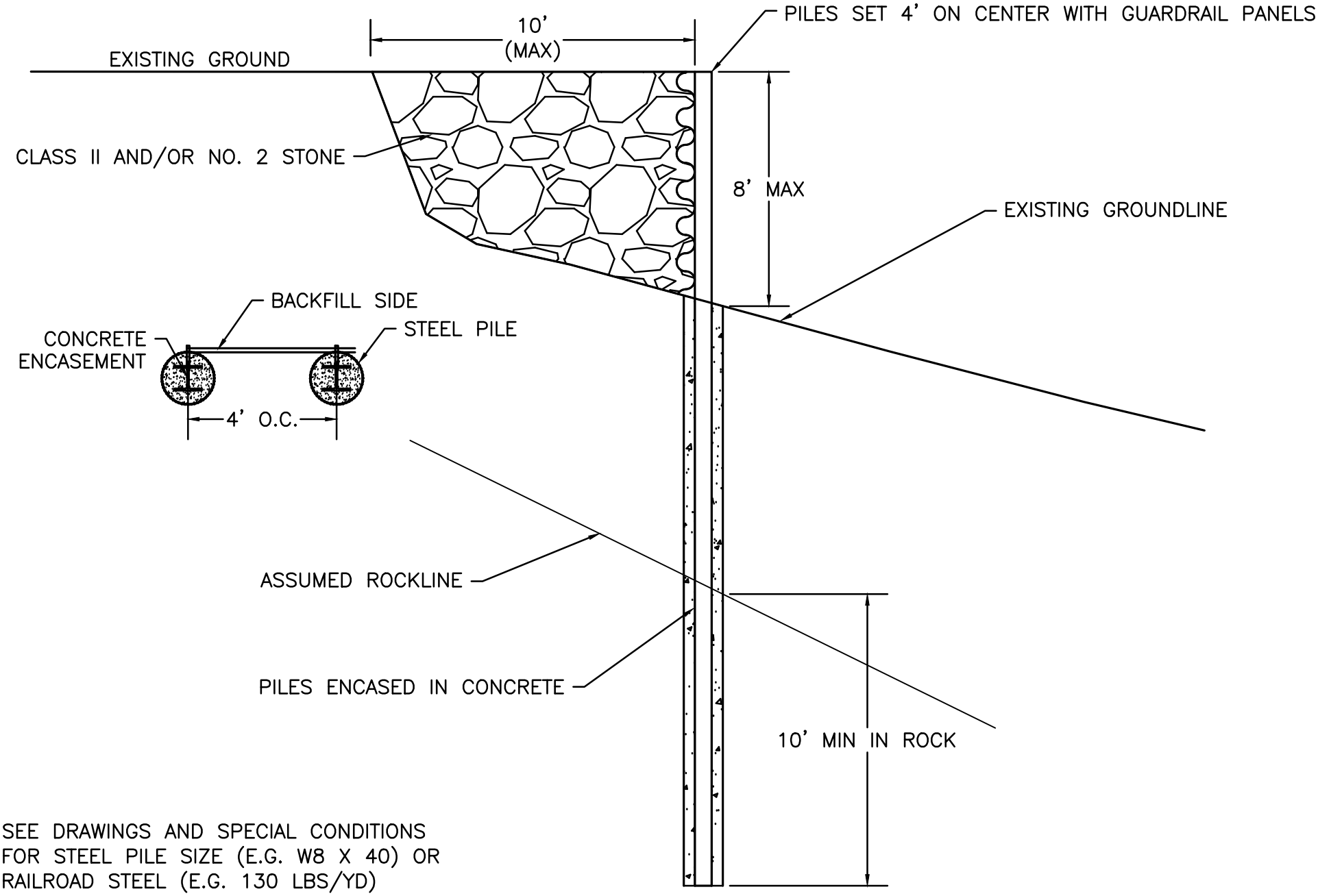

SEE DRAWINGS AND SPECIAL CONDITIONS
FOR STEEL PILE SIZE (E.G. W8 X 40) OR
RAILROAD STEEL (E.G. 130 LBS/YD)

GUARDRAIL PANEL WALL- STEEL PILES (AML 50-20-3)

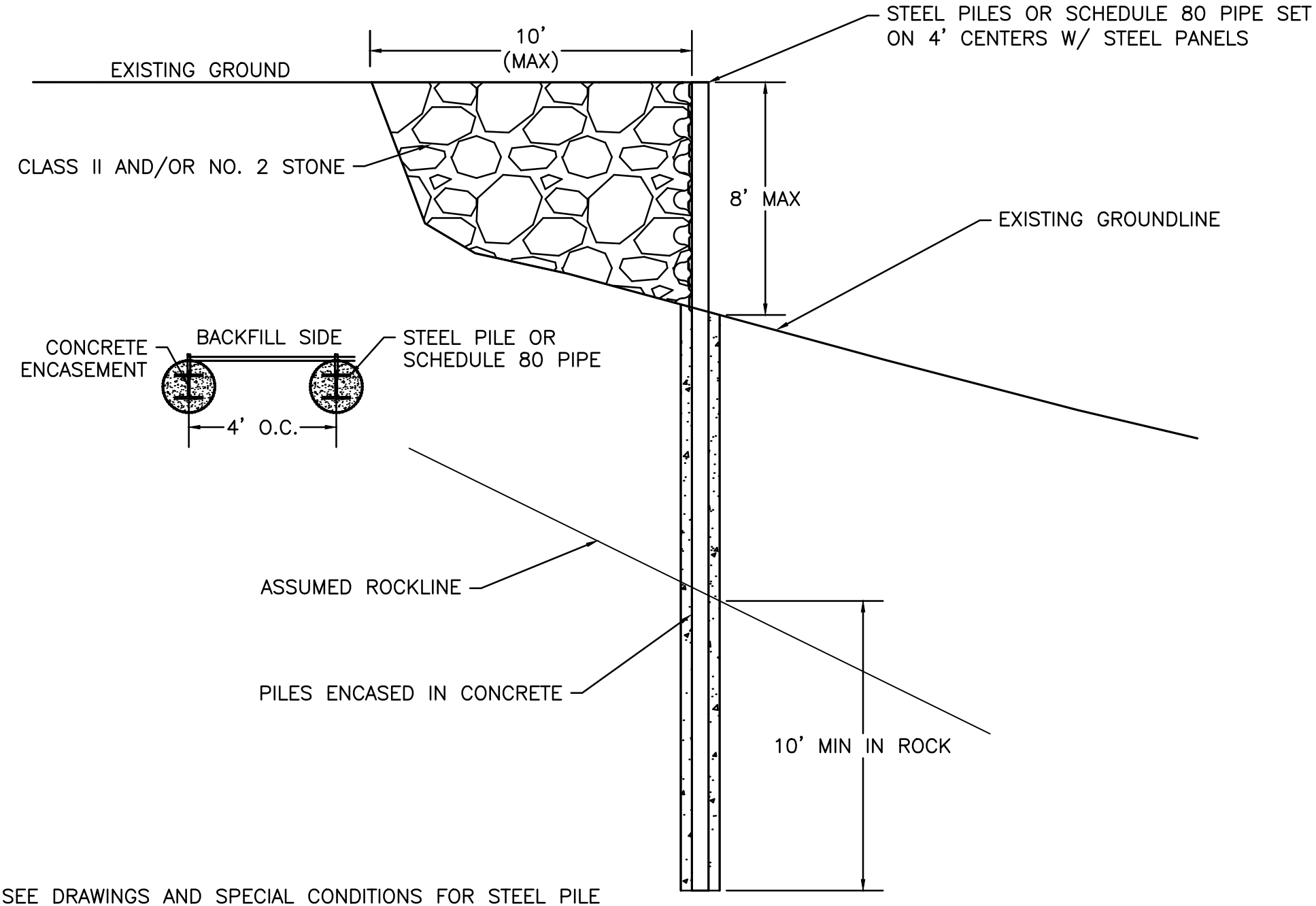

SEE DRAWINGS AND SPECIAL CONDITIONS FOR STEEL PILE SIZE (E.G. W8 X 40) OR RAILROAD STEEL (E.G. 130 LBS/YD)

STEEL PANEL WALL (AML 50-20-4)

KY DAML 10-2015

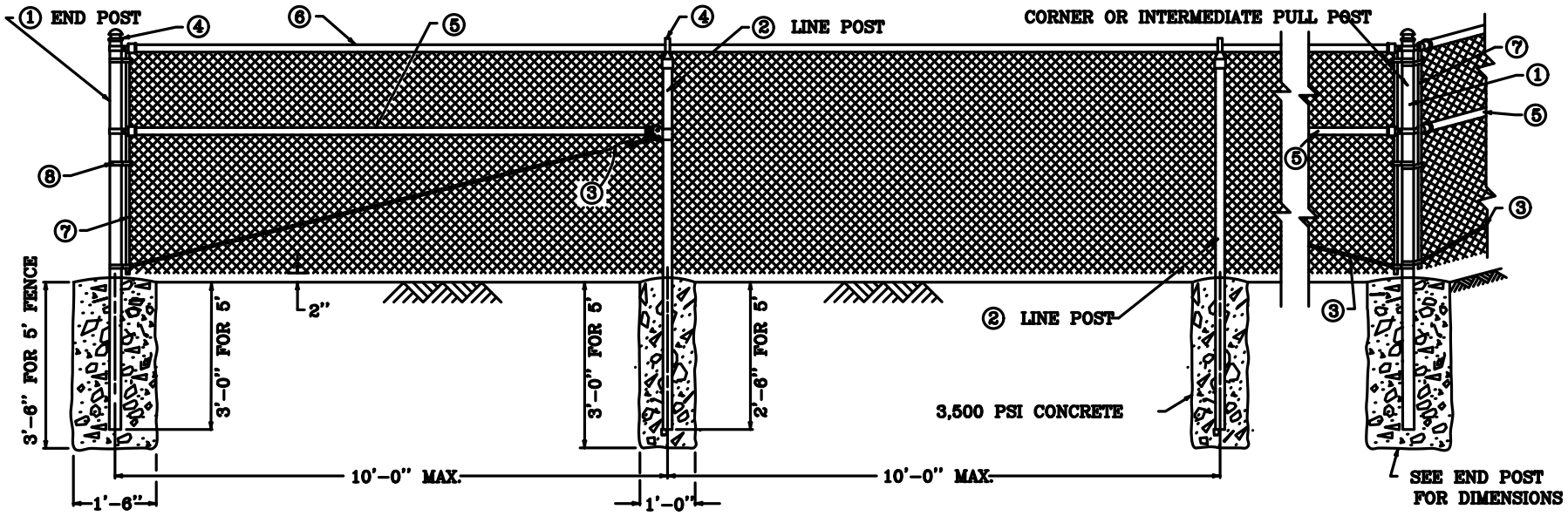

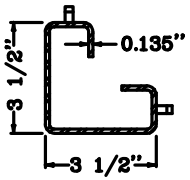

ROLL FORMED
TERMINAL POST &
CORNER POST

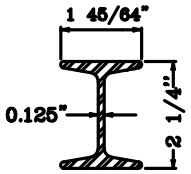

HOT ROLLED
LINE POST
H – COLUMN

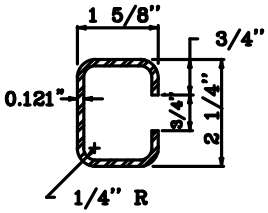

LINE POST
HEAVY "C" ROLL FORMED

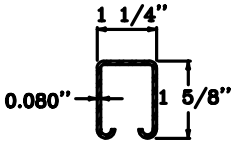

HOT ROLLED
TOP & BRACE
RAIL

~ NOTES ~

ALL POSTS SHALL BE SET IN CONCRETE TO THE DIMENSIONS INDICATED ON THIS DRAWING.

5' HIGH FENCE SHALL HAVE 5' FABRIC HEIGHT.

ALL FENCE FITTINGS SHALL COMPLY WITH ASTM F 626.

POST CAPS AND SOCKET TYPE BRACE END CONNECTIONS SHALL BE GALVANIZED PRESSED STEEL, CAST IRON OR OTHER TYPE AS APPROVED BY THE ENGINEER. THEY SHALL BE DESIGNED IN A MANNER TO EXCLUDE MOISTURE FROM INSIDE POSTS AND RAILS.

NPS = NOMINAL PIPE SIZE – ASTM F1083 AND F1043 (HEAVY INDUSTRIAL FENCE) SHALL GOVERN.

INDISCRIMINATE MIXING OF POSTS WILL NOT BE PERMITTED.

⑥ TENSION WIRE COMPLYING WITH ASTM A 824 SHALL BE SUBSTITUTED FOR THE TOP RAIL WHEN THE FENCE IS TO BE INSTALLED IN THE PATH OF AN ERRANT VEHICLE.

LEGEND / (ALTERNATES)

	TUBULAR	ROLL FORMED
①	2 1/2" NPS END POST	3 1/2" X 3 1/2" END POST
②	2" NPS LINE POST	2 1/4" H–COL. LINE POST – OR – 2 1/4" C–COL. LINE POST
③	3/8" DIA.TRUSS ROD AND TIGHTNER	3/8 " DIA. TRUSS ROD AND TIGHTNER
④	APPROVED CAPS	NOT REQUIRED
⑤	1 1/4" NPS BRACE	1 1/4" X 1 5/8" TOP RAIL & BRACE
⑥	1 1/4" NPS TOP RAIL	
⑦	FLAT TENSION BAR	NOT REQUIRED
⑧	BRACE BAND AND TENSION BAND	NOT REQUIRED

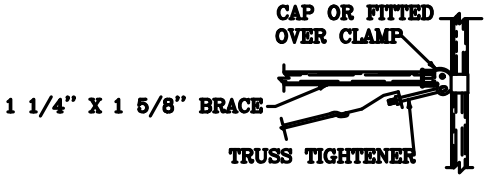

BRACE AND TRUSS
CONNECTOR

CHAIN-LINK FENCE (AML 50-20-5)

KY DAML 1–2013

END POST 2 1/2 " NPS

CORNER OR INTERMEDIATE PULL POST 2 1/2 " NPS

10'-0"

10'-0"

10'-0"

12'-0"

BRACE 1 1/4 " NPS

3"

① CLIPS OR FABRIC TIES ON ALL LINE POST AS SHOWN

CAP

SEE DETAIL "A"

7'-0"

3'-11"

45°

3'-11"

7'-0"

45°

45°

LINE POST

2'-6"

3'-0"

2'-0"

2'-6"

1'-6"

2"

2'-6"

3'-0"

2'-6"

② GROUND OR ANCHOR PLATE

3,500 PSI CONCRETE

LINE POST

1'-6"

1'-6"

MATERIALS:

WOVEN-WIRE FABRIC SHALL BE EITHER ALUMINUM-COATED STEEL NO. 1047-6-9 OR ZINC-COATED STEEL NO. 1047-6-9.

ALL FENCE FITTINGS SHALL COMPLY WITH ASTM F 626.

NPS = NOMINAL PIPE SIZE - ASTM F1083 AND F1043 (HEAVY INDUSTRIAL FENCE) SHALL GOVERN.

① STUDDED "T" POST AT 1.33 LBS. PER FOOT

- OR -

ROLL FORM POST AT 1.40 LBS. PER FOOT (SEE DETAIL)

② NOT REQUIRED FOR ROLL FORM POST.

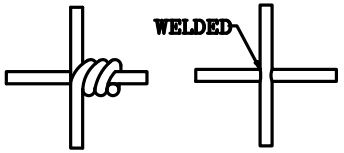

ALTERNATE METHODS OF SECURING VERTICAL STAY WIRE TO THE HORIZONTAL WIRE OF THE FABRIC.

DETAIL "A"

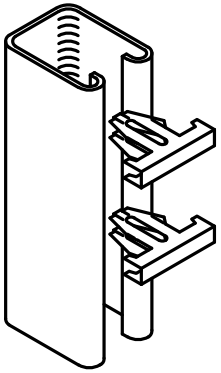

ISOMETRIC EXPLODED VIEW OF ROLL FORM POST AND CLIPS

CLIPS SHALL BE SPRING STEEL ALUMINUM - FINISHED

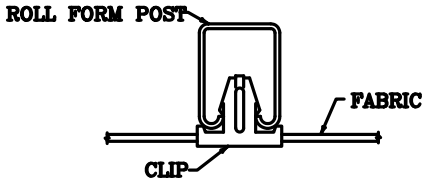

PLAN VIEW OF CLIP INSTALLED IN ROLL FORM POST

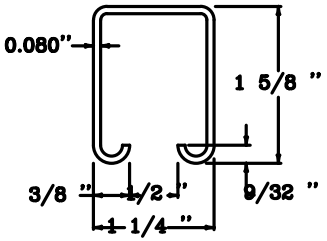

PLAN VIEW OF ROLL FORM POST

WOVEN - WIRE FENCE (AML 50-20-6)

KY DAML 1-2013

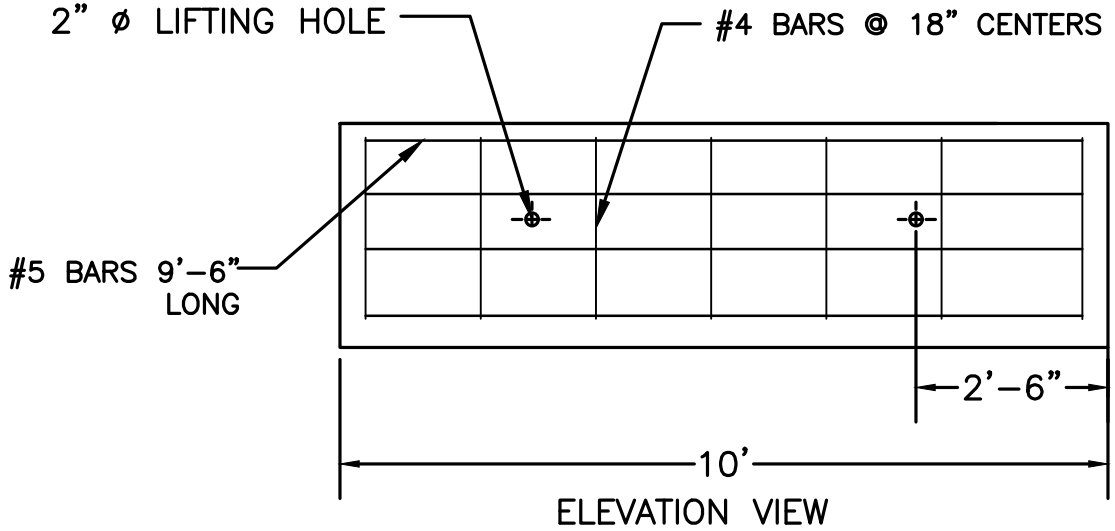

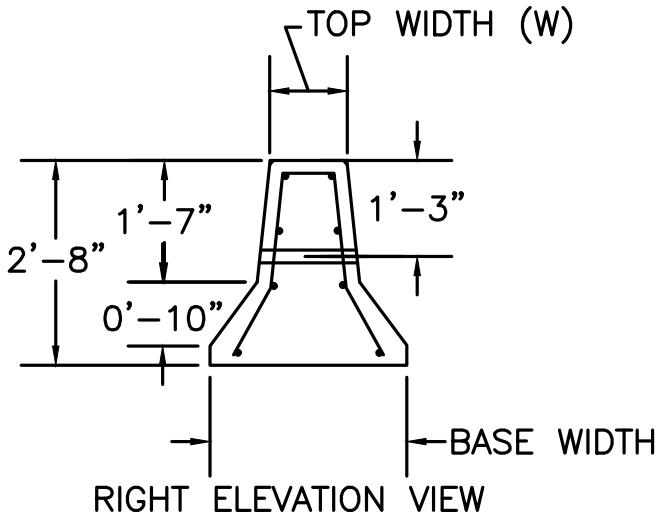

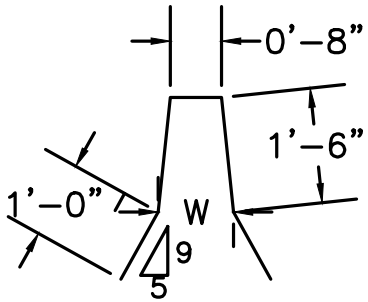

1. SECTIONS WILL BE 10' LONG UNLESS APPROVED BY ENGINEER.
2. 2' DIA. LIFTING HOLE– 2 REQUIRED FOR EACH SECTION FORMED WITH 2" PVC PIPE OR EQUAL.
3. ALL STEEL HAS 2" MIN. CLEAR DISTANCE FROM OUTSIDE FACE OF BARRIER.
4. LIFTING BARS SHALL BE REQUIRED TO PREVENT SPALLING OF CONCRETE AROUND HOLES.

ACCEPTABLE SIZES	
TOP WIDTH	BASE WIDTH
0'-9"	2'-2"
1'-0"	2'-6"
1'-2"	2'-8"

CONCRETE JERSEY BARRIER (AML 50-20-7)

KY DAML 1-2013

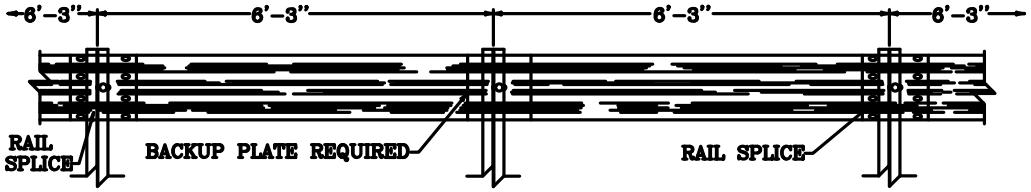

ELEVATION VIEW

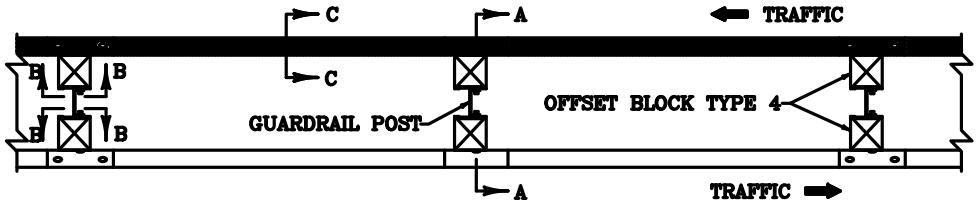

PLAN VIEW
(DOUBLE FACE RAIL OR SINGLE FACE RAIL)

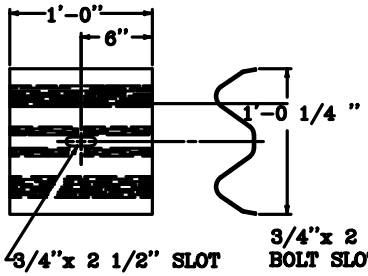

BACK-UP PLATE

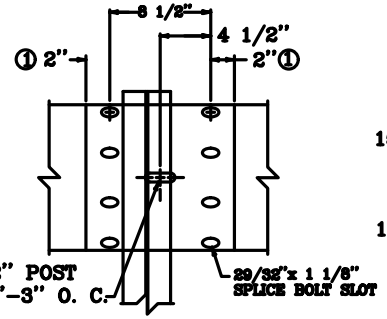

RAIL SPLICE ②

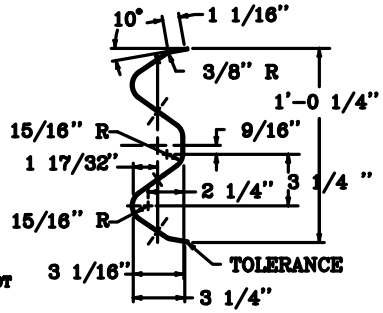

SECTION C-C
(RAIL CORRUGATED
SHEET STEEL BEAM)

NOTES

THE CONTRACT UNIT PRICE BID SHALL BE:
GUARDRAIL-STEEL W BEAM-SINGLE FACE - LIN. FT.
OR
GUARDRAIL-STEEL W BEAM-DOUBLE FACE - LIN. FT.

DIMENSIONAL TOLERANCES NOT SHOWN OR IMPLIED ARE INTENDED TO BE THOSE CONSISTENT WITH THE PROPER FUNCTIONING OF THE PART, INCLUDING ITS APPEARANCE AND ACCEPTED MANUFACTURING PRACTICES.

THE RAIL ELEMENT SHALL COMPLY WITH AASHTO M-180 -CLASS A, TYPE II.

ALL LAPS SHALL BE PLACED IN THE DIRECTION OF TRAFFIC FLOW.

① TOLERANCE + 1 1/4", - 1/4"

② 8 - 5/8"x 1 1/4" LONG BUTTON HEAD BOLTS AND HEX HEAD RECESS NUTS REQUIRED FOR EACH RAIL SPLICE.

③ LENGTH EQUALS POST AND BLOCK WIDTH PLUS: 2" FOR BOLT OR 2 1/4" FOR THREADED ROD.

④ GALVANIZED STEEL 10d COMMON COATED NAIL (DRIVE NAIL AT THE TOP OR BOTTOM CENTER OF BLOCK AND POST AFTER BOLT IS INSTALLED).

⑤ 5/"x ③ STEEL THREADED ROD AND TWO (2) HEX HEAD NUTS OR 5/8"x ③ BUTTON OR HEX HEAD BOLT AND HEX HEAD NUT.

⑥ 5/8"x 8" BUTTON HEAD BOLT, HEX HEAD RECESS NUT AND ONE 5/8" ROUND WASHER (TYP.). BOLT SHALL HAVE A MINIMUM THREAD LENGTH OF 2".

REQUIRED FOR DOUBLE RAIL

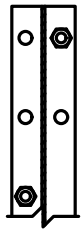

SECTION B-B

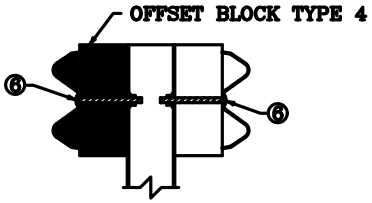

SECTION A-A
DOUBLE FACE RAIL WITH
STEEL POST (W6x9)
(TIMBER OFFSET BLOCK)

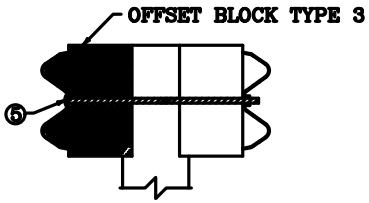

SECTION A-A
DOUBLE FACE RAIL WITH
ROUND TIMBER POST

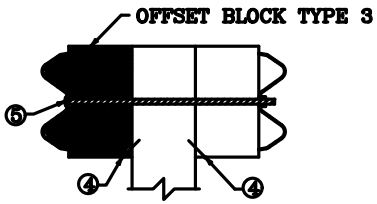

SECTION A-A
DOUBLE FACE RAIL WITH
TIMBER POST

USE WITH AML 50-20-8B,C,D

STEEL BEAM GUARDRAIL (AML 50-20-8A)

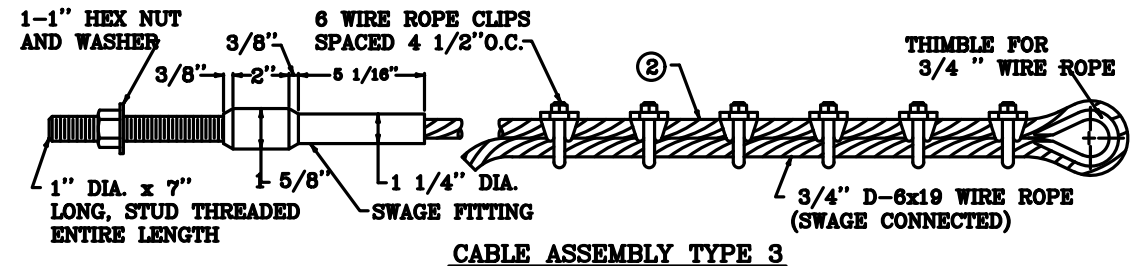

CABLE ASSEMBLY TYPE 3

NOTES

① RAIL BOLT SIMILAR EXCEPT LENGTH.
② CABLE ASSEMBLY TYPE 3 - GUARDRAIL END TREATMENT TYPE 2A
③ THE THRIE BEAM TO "W" BEAM CONNECTOR SHALL COMPLY WITH AASHTO M-180 CLASS A, TYPE 2 EXCEPT WHERE IN CONFLICT WITH THIS DETAIL.

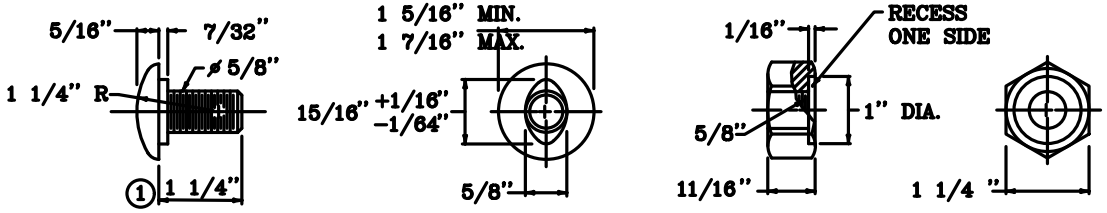

5/8" BUTTON HEAD BOLT AND RECESSED NUT

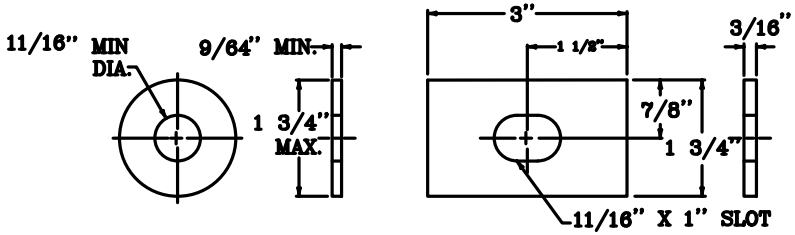

ROUND WASHER AND RECTANGULAR PLATE WASHER

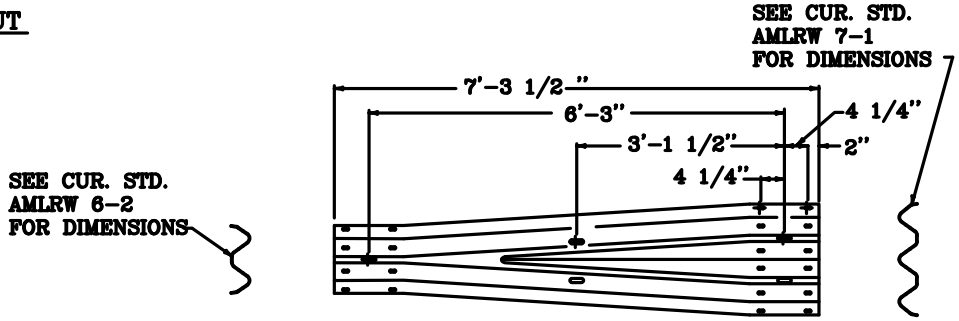

THRIE BEAM TO "W" BEAM CONNECTOR ③

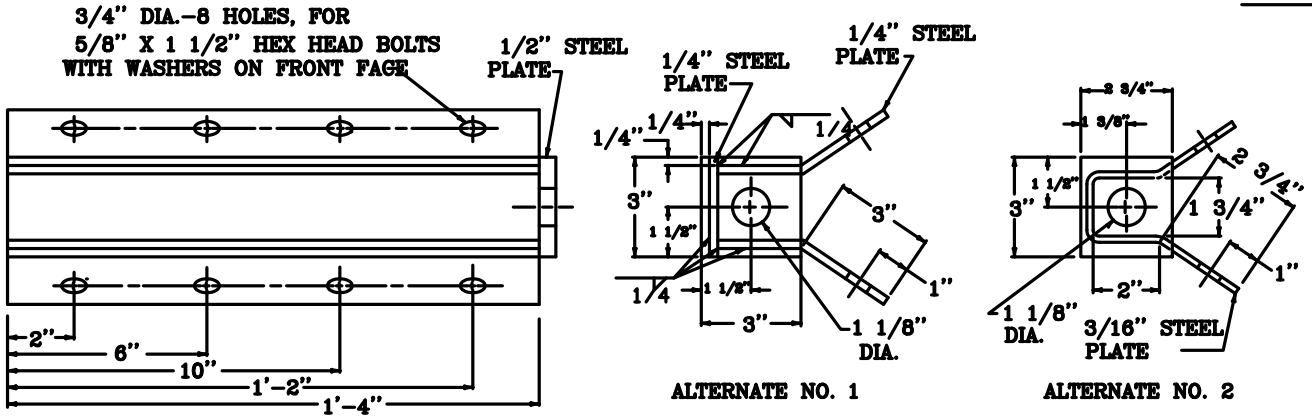

RAIL ANCHOR ASSEMBLY

USE WITH AML 50-20-8A,C,D

GUARDRAIL COMPONENTS (AML 50-20-8B)

KY DAML 1-2013

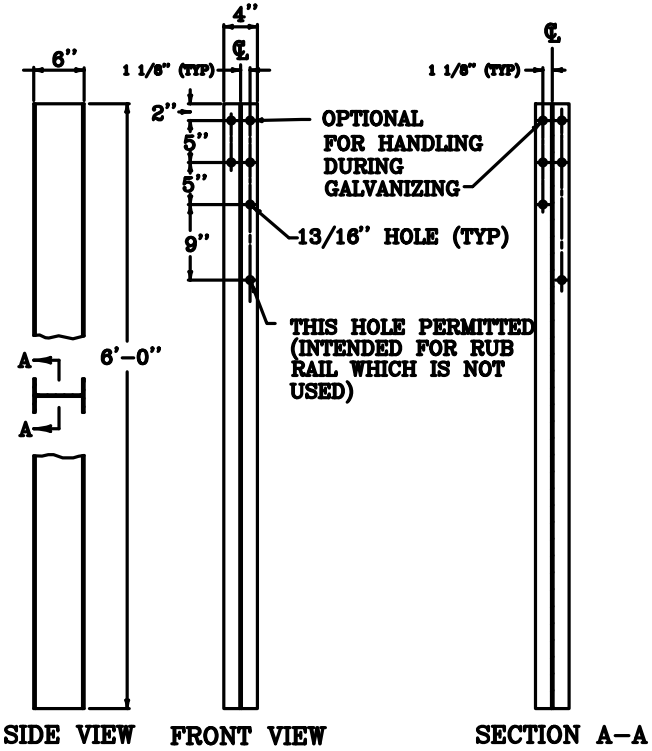

~ W6 X 9.0 STEEL POST ① ~

~ NOTES ~

① W6 X 8.5 IS AN ACCEPTABLE ALTERNATE.

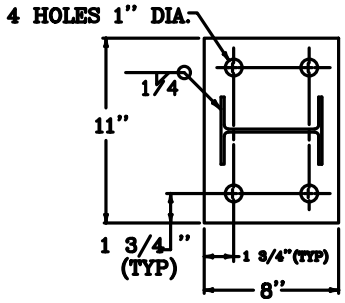

PLAN VIEW

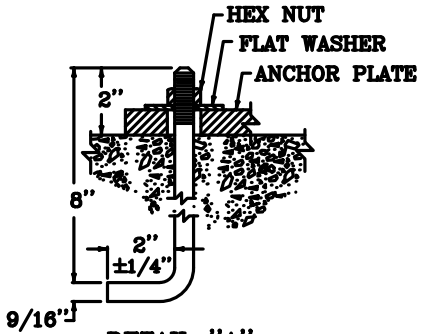

DETAIL "A"

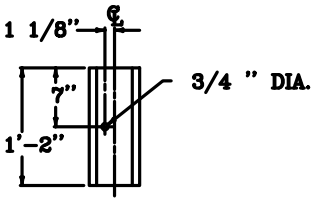

REAR ELEVATION

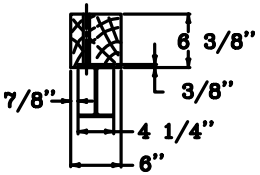

PLAN VIEW

OFFSET BLOCK TYPE 4
(TIMBER)
(FOR USE WITH STEEL POST ONLY)

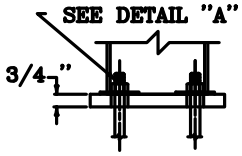

SIDE VIEW
ANCHOR PLATE

USE WITH AML 50-20-8A, 8B

GUARDRAIL POST- STEEL (AML 50-20-8C)

KY DAML 1-2013

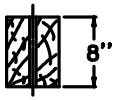

PLAN VIEW

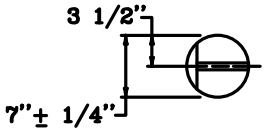

PLAN VIEW

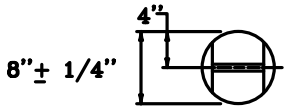

PLAN VIEW

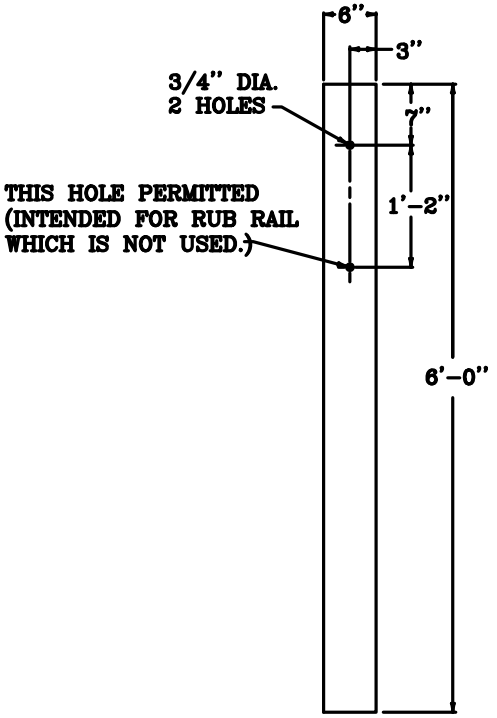

FRONT ELEVATION
6"x8" TIMBER POST

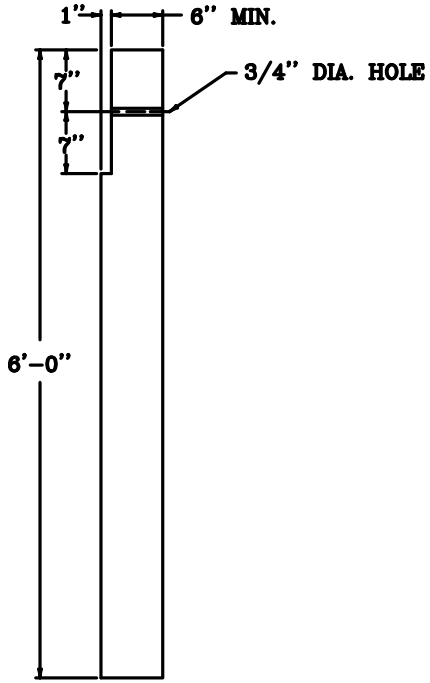

7" ROUND TIMBER POST
(SINGLE FACE RAIL)

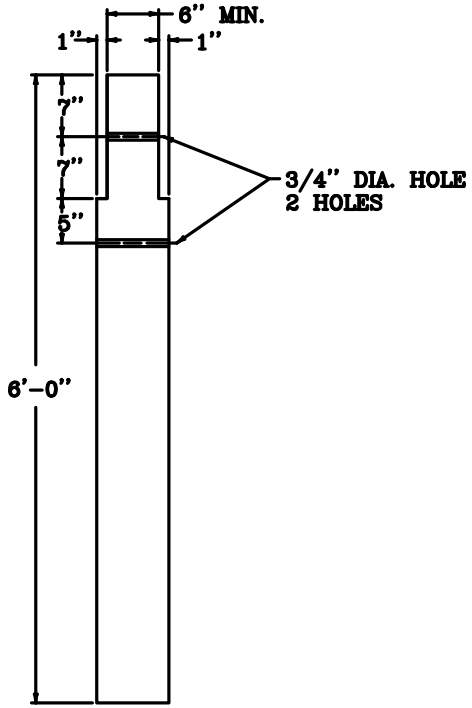

8" ROUND TIMBER POST
(DOUBLE FACE RAIL)

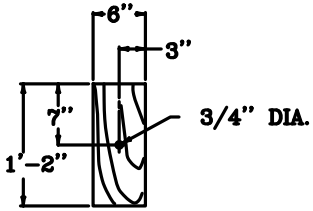

FRONT ELEVATION
OFFSET BLOCK TYPE 3
(6" X 8" TIMBER)
(FOR USE WITH RECTANGULAR
AND ROUND POSTS)

USE WITH AML 50-20-8A, 8B

GUARDRAIL POST- TIMBER (AML50-20-8D)

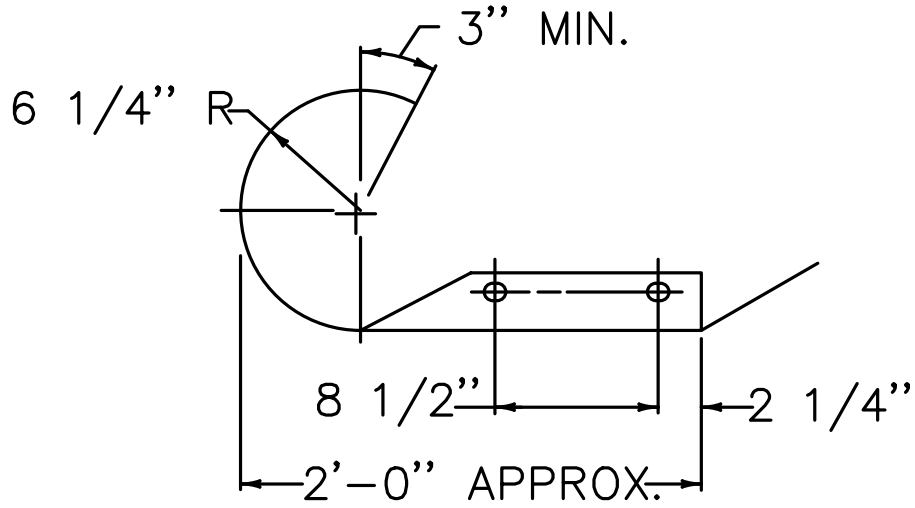

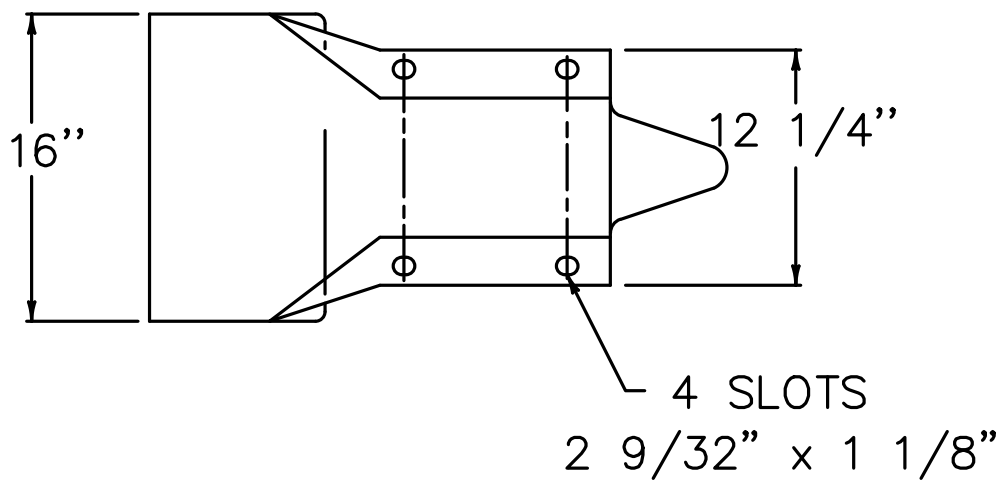

GUARDRAIL TERMINAL SECTION (AML 50-20-9)

KYDAML 10-2013

PLAN VIEW

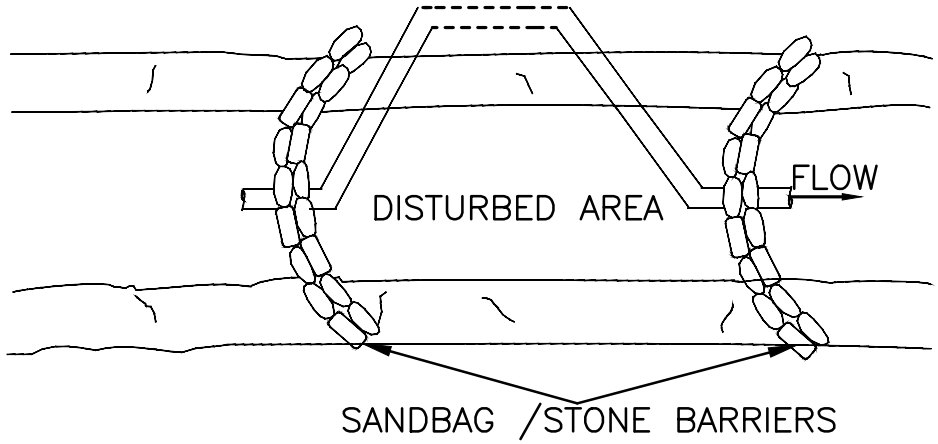

BARRIER HEIGHT = BANK HEIGHT "H"/2 + 1' FOR PROJECTS OF DURATION <2 WEEKS;
2-YEAR FLOOD ELEVATION FOR PROJECTS OF LONGER DURATION

LONGITUDINAL SECTION VIEW

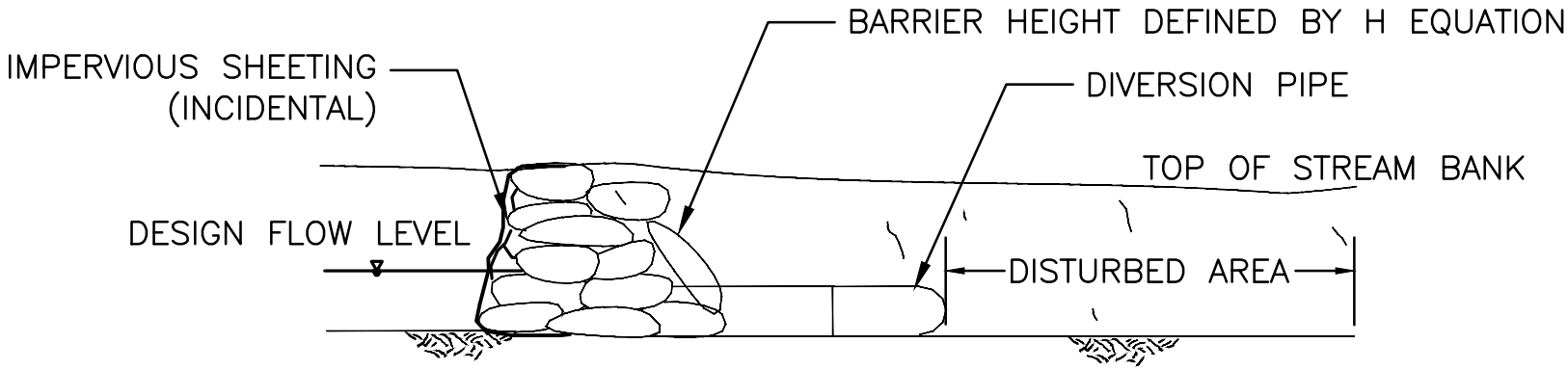

PIPE DIVERSION (AML 60-10-1)

KY DAML 1-2013

TRANSVERSE SECTION VIEW

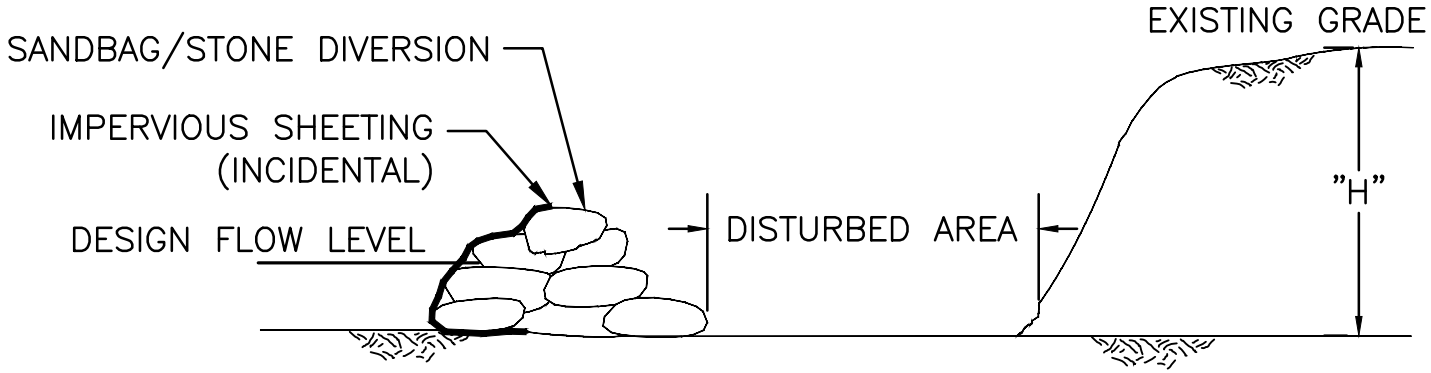

BARRIER HEIGHT = BANK HEIGHT "H"/2 + 1' FOR PROJECTS OF DURATION <2 WEEKS;
2-YEAR FLOOD ELEVATION FOR PROJECTS OF LONGER DURATION

PLAN VIEW

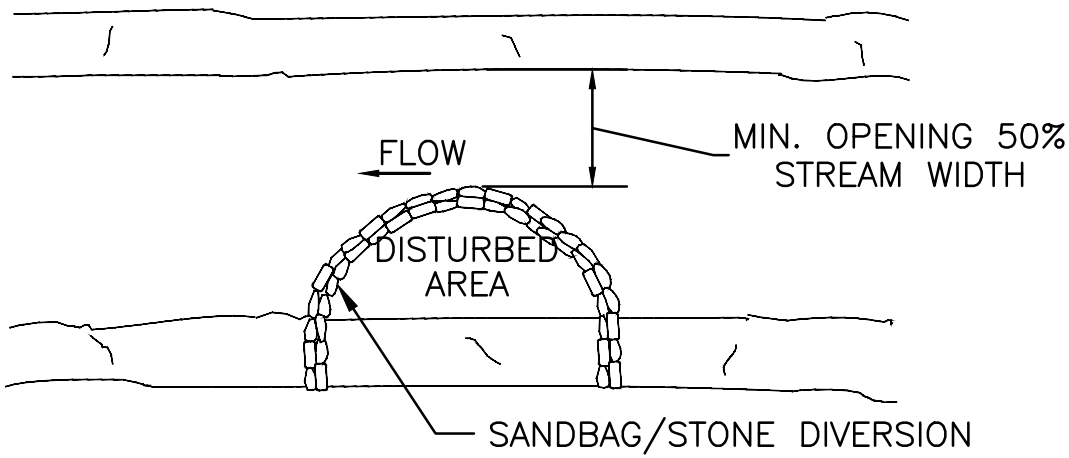

SANDBAG/STONE DIVERSION (AML 60-10-2)

PLAN VIEW

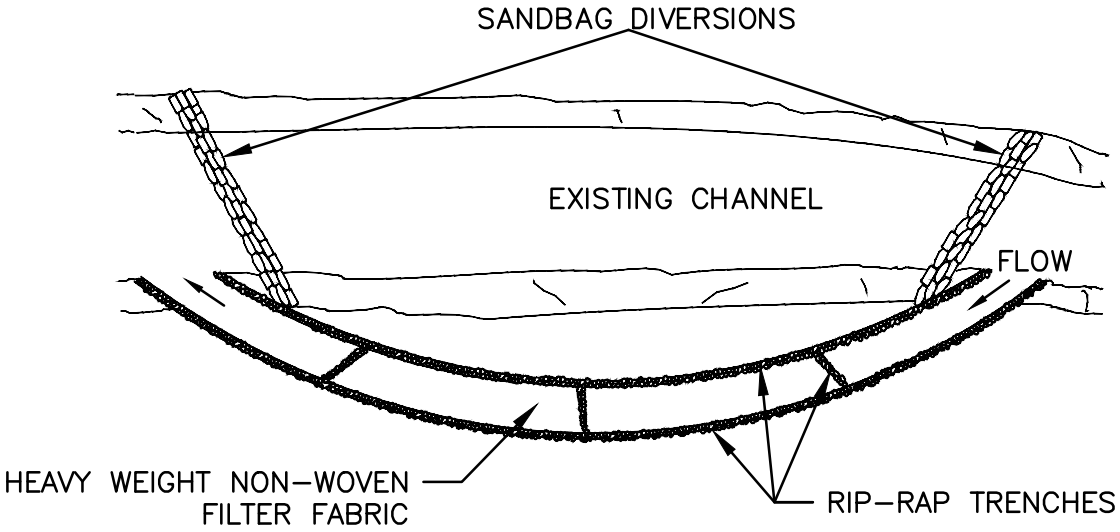

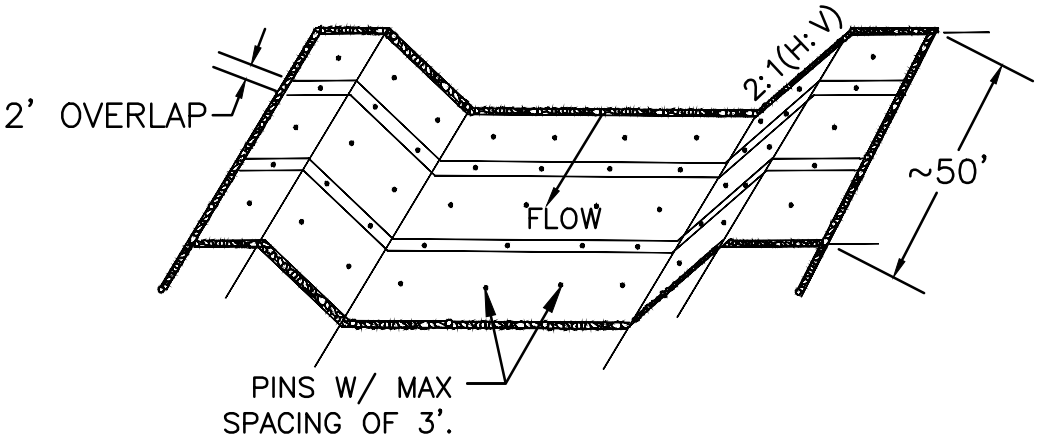

SECTION VIEW

TRENCHING DETAIL

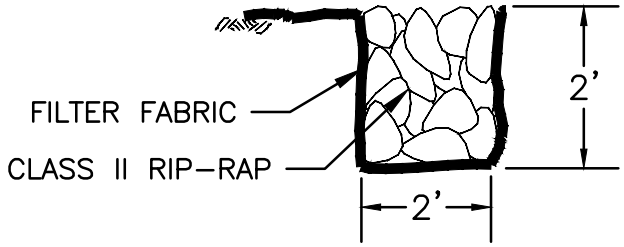

FABRIC-BASED DIVERSION CHANNEL (AML 60-10-3)

KY DAML 1-2013

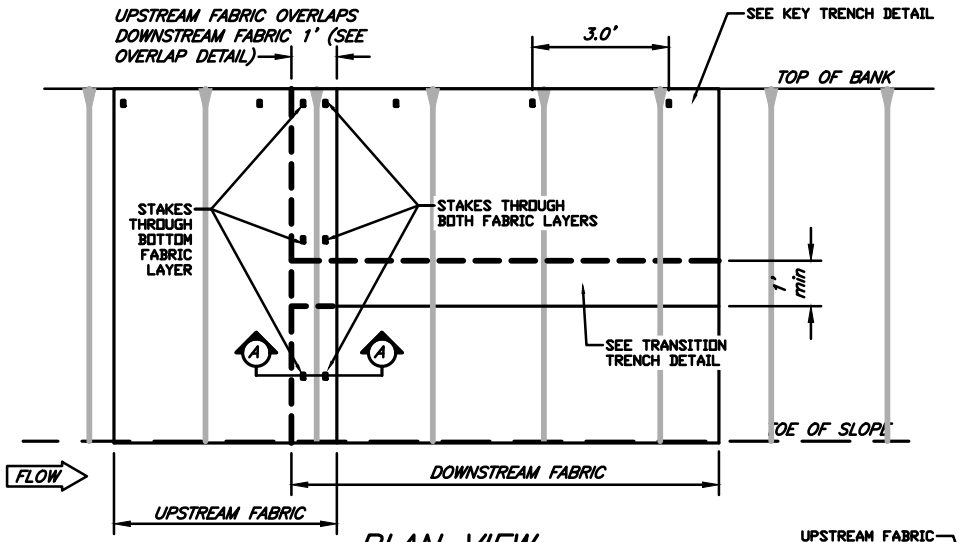

PLAN VIEW

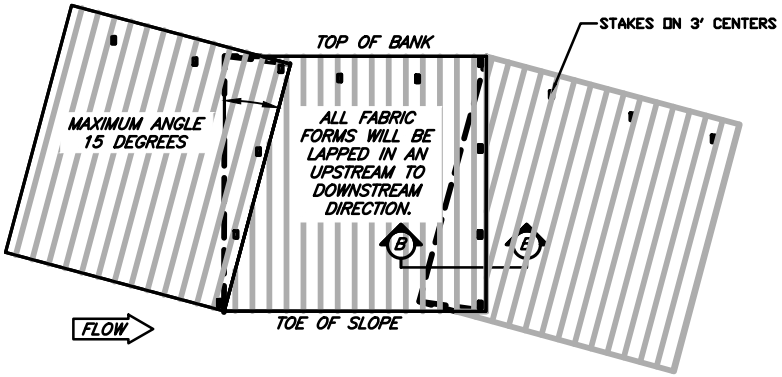

PLAN VIEW FOLDING FABRIC AT BENDS

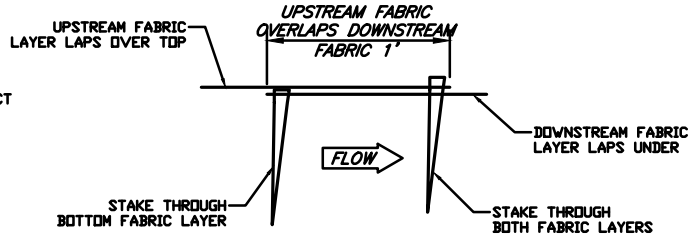

OVERLAP SECTION A

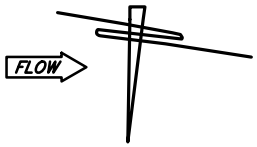

OVERLAP SECTION B

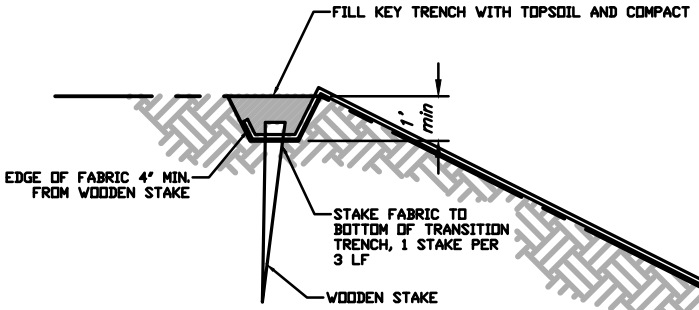

KEY TRENCH DETAIL

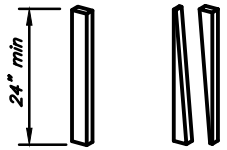

SAW A 2 X 4 DIAGONALLY TO PRODUCE 2 DEAD STOUT STAKES.

TYPICAL DETAIL STAKE

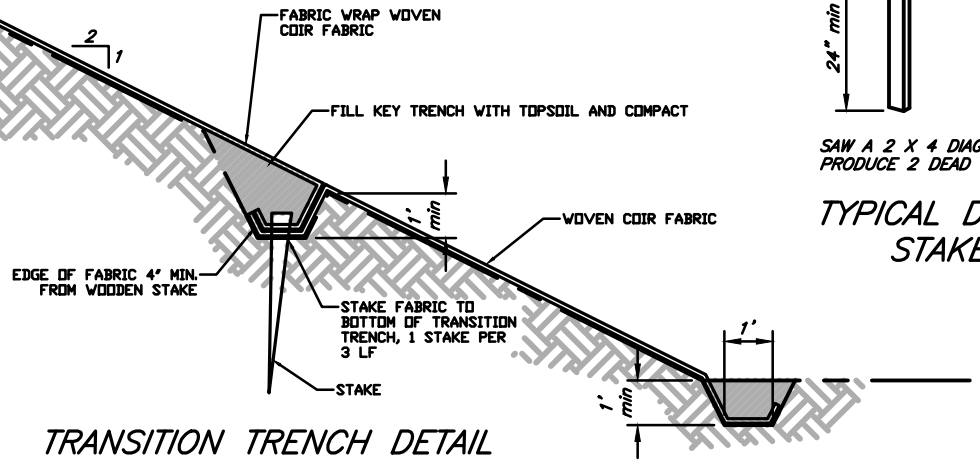

TRANSITION TRENCH DETAIL

GENERAL NOTES

1. COIR ABLE TO WITHSTAND 10 FPS WATER VELOCITIES AND 4.46 PSF SHEAR STRESS. FABRIC EMBEDMENT 3.0 FT.
2. PREPARE SOIL BEFORE INSTALLING ROLLED EROSION CONTROL PRODUCTS (RECP), INCLUDING ANY NECESSARY APPLICATION OF LIME, FERTILIZER AND SEED.
3. BEGIN AT TOP OF THE SLOPE BY ANCHORING RECP'S IN A 1' DEEP BY 6" WIDE TRENCH WITH APPROXIMATELY 12" EXTENDED BEYOND THE UPSLOPE PORTION OF THE TRENCH. ANCHOR THE RECP WITH A ROW OF STAKES APPROXIMATELY 3' APART IN BOTTOM OF THE TRENCH. BACKFILL AND COMPACT THE TRENCH. APPLY SEED TO COMPACTED SOIL AND FOLD REMAINING 12" PORTION OF RECP BACK OVER SEED AND COMPACTED SOIL. SECURE RECP OVER COMPACTED SOIL WITH A ROW OF STAKES SPACED APPROXIMATELY 12" APART ACROSS THE WIDTH OF THE RECP. THE EDGES OF RECP'S MUST BE OVERLAPPED A MINIMUM OF 1'.

ECB BANK PROTECTION (AML 60-20-1)

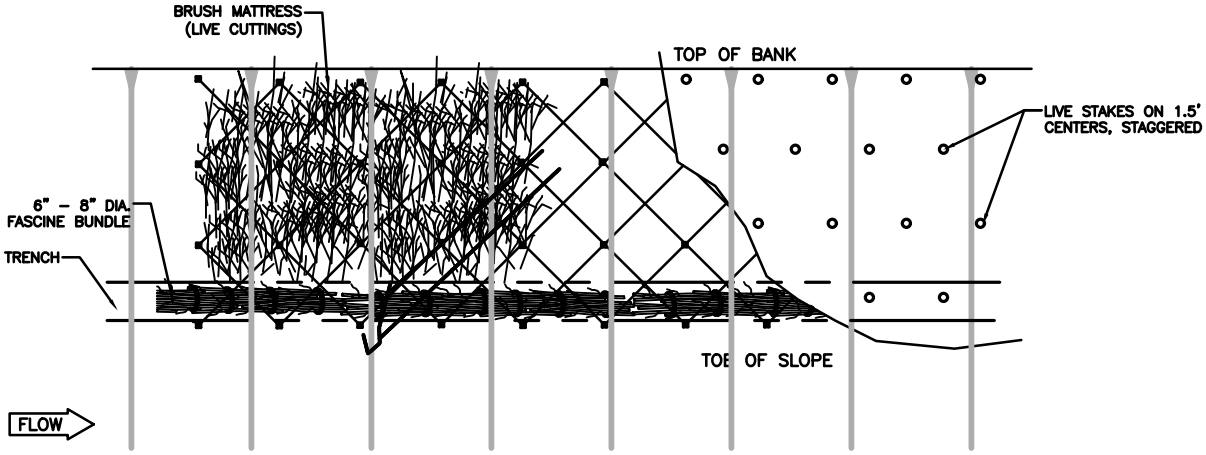

PLAN VIEW

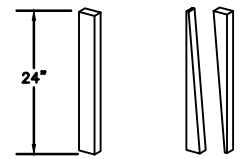

SAW A 2 X 4 DIAGONALLY TO PRODUCE 2 STAKES.

TYPICAL DETAIL
STAKE

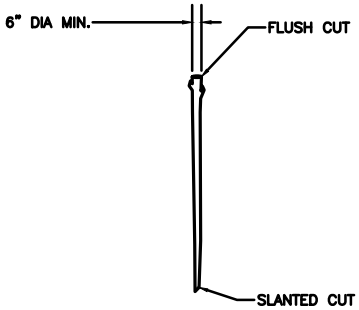

DRIVE INTO SOIL USING RUBBER MALLET. CUT BENEATH MUSHROOMED OR SPLIT END.

TYPICAL DETAIL
LIVE STAKE

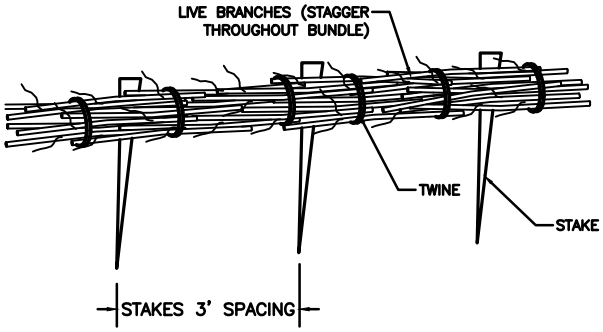

LIVE FASCINE BUNDLE 6–8 FT. LONG 8–10 IN. DIA.

FASCINE DETAIL

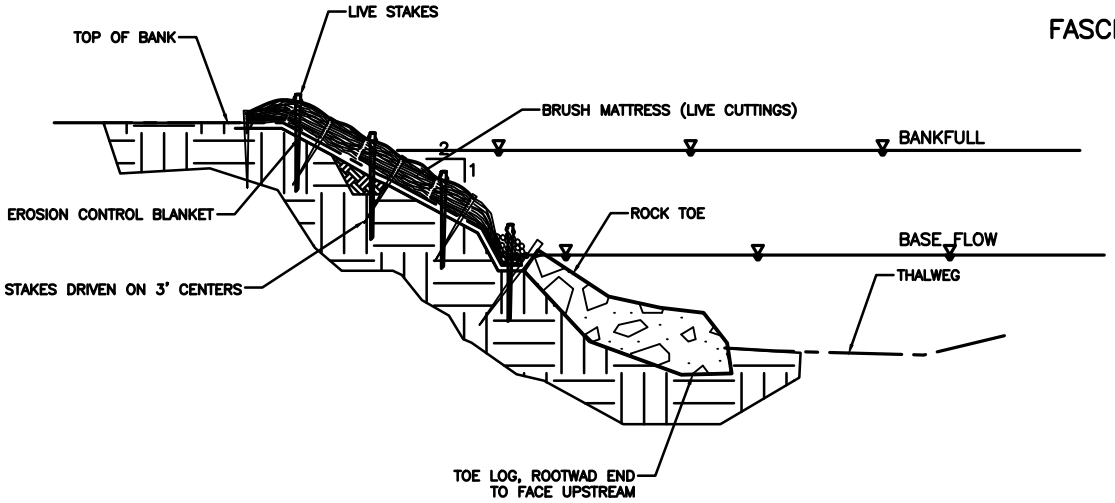

SECTION VIEW

GENERAL NOTES

1. COCONUT EROSION CONTROL BLANKET SHALL BE ABLE TO WITHSTAND 10 FPS WATER VELOCITIES AND 4.46 PSF SHEAR STRESS. FABRIC EMBEDMENT 3.0 FT.
2. FASCINES WILL CONTAIN DORMANT LIVE WOODY MATERIAL 1/2 TO 2 INCHES IN DIAMETER FORMING BUNDLES THAT ARE 8" MINIMUM DIAMETER AND NOT LESS THAN 6 FEET IN LENGTH (L). THE PLANT MATERIAL SHOULD BE DORMANT, STRIPPED OF LEAVES AND IRRIGATED.
3. FASCINE BUNDLES SHALL BE TIED WITH UNTREATED TWINE EVERY 1 TO 2 FEET.
4. PLACE AND FIRMLY COMPACT SOIL OVER AND AROUND FASCINE LEAVING APPROXIMATELY 30% OF UPPER BRANCHES EXPOSED.
5. STAKES USED TO SECURE THE LIVE FASCINES SHOULD BE 2 FEET LONG, UNTREATED, 2X4 LUMBER, CUT DIAGONALLY. STAKES SHALL BE DRIVEN IN AT REQUIRED CONTOUR INTERVAL.
6. LOGS SHALL BE 1.5'ø, 20' LONG WITH 4' ROOTWAD. EMBED BALLAST LOGS 13' MIN. INTO BANK. BALLAST LOG SHALL BE PLACED WITH A "TIGHT" CONNECTION TO RESTRAIN TOE LOG.

BRUSH MATTRESS BANK TREATMENT - (AML 60-20-2)

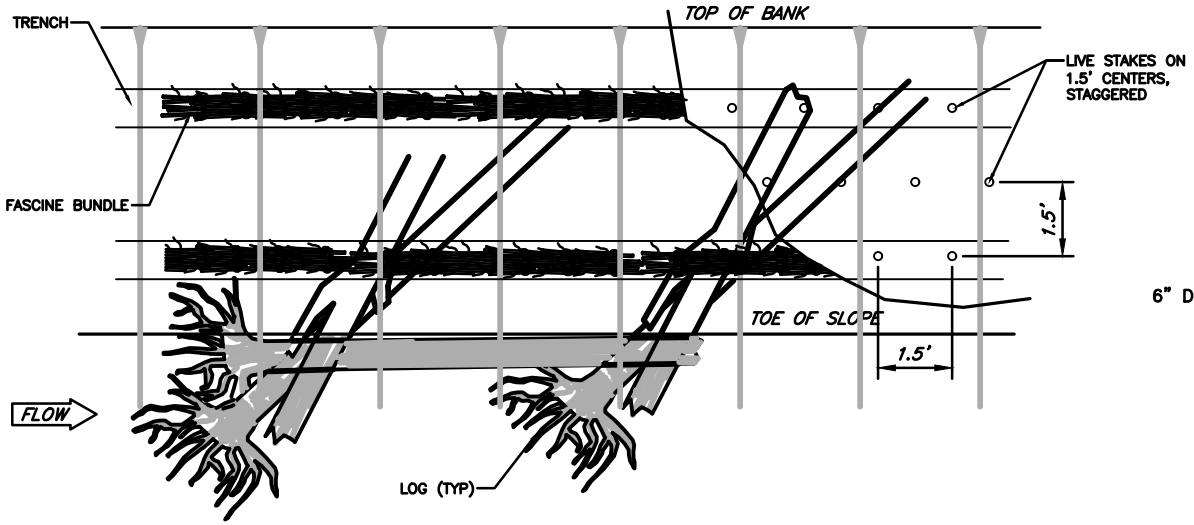

PLAN VIEW

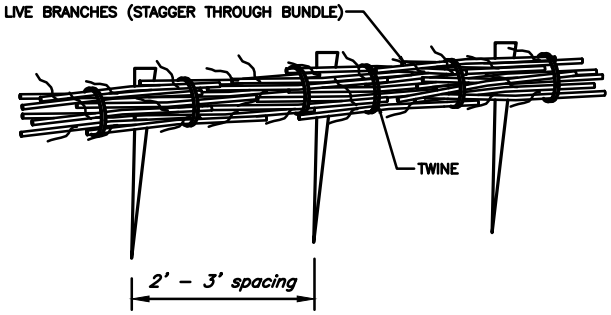

LIVE FASCINE BUNDLE 5–30 FT. LONG 8–10 IN. DIA.

FASCINE DETAIL

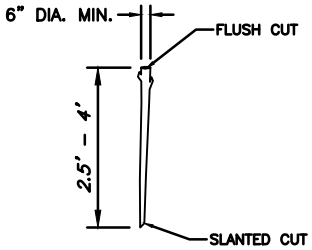

DRIVE INTO SOIL USING RUBBER MALLET.
CUT BENEATH MUSHROOMED OR SPLIT END.

TYPICAL DETAIL
LIVE STAKE

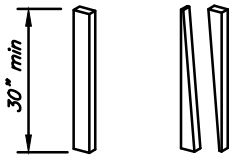

SAW A 2 X 4 DIAGONALLY TO PRODUCE 2 DEAD STOUT STAKES.

TYPICAL DETAIL
DEAD STAKE

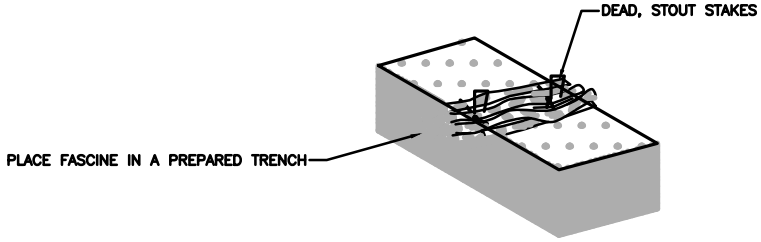

ISOMETRIC VIEW

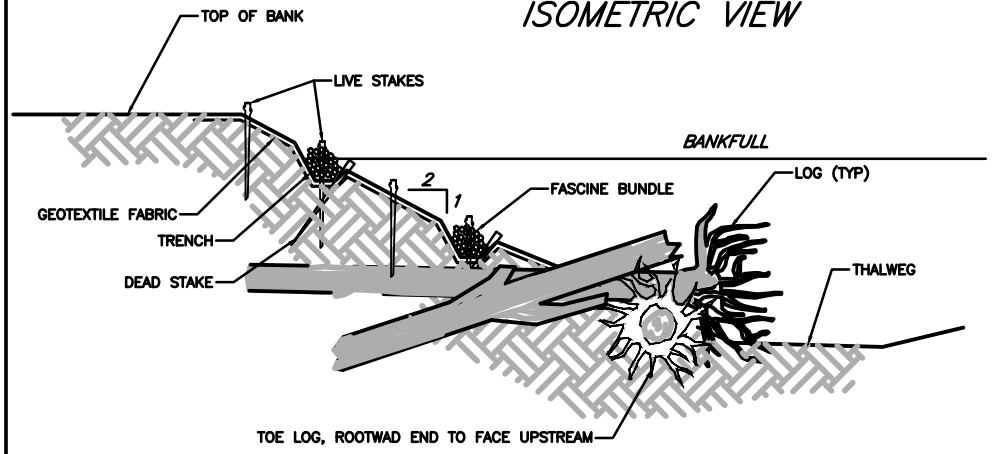

SECTION VIEW

GENERAL NOTES

1. FASCINES WILL CONTAIN DORMANT LIVE WOODY MATERIAL 1/2 TO 2 INCHES IN DIAMETER FORMING BUNDLES THAT ARE 8" MINIMUM DIAMETER AND NOT LESS THAN 6 FEET IN LENGTH (L). THE PLANT MATERIAL SHOULD BE DORMANT, STRIPPED OF LEAVES AND IRRIGATED.
2. FASCINE BUNDLES SHALL BE TIED WITH UNTREATED TWINE EVERY 1 TO 2 FEET.
3. PLACE AND FIRMLY COMPACT SOIL OVER AND AROUND FASCINE LEAVING APPROXIMATELY 30% OF UPPER BRANCHES EXPOSED.
4. STRUCTURAL MEASURES SUCH AS REVETMENT OR DRAINAGE TO BE INSTALLED PRIOR TO FASCINES. SLOPE SHALL BE SHAPED AND GRADED TO SLOPE INDICATED ON DRAWING.
5. FASCINES TRENCH TO BE EXCAVATED BY HAND JUST ABOVE EACH ANCHOR STAKE, WORKING FROM THE BOTTOM OF THE SLOPE TO THE TOP. TRENCH DEPTH SHALL BE ONE–HALF THE FASCINE DIAMETER.
6. LOGS SHALL BE 1.5'ø, 20' LONG WITH 4' ROOTWAD. EMBED BALLAST LOGS 13' MIN. INTO BANK. BALLAST LOG SHALL BE PLACED WITH A "TIGHT" CONNECTION TO RESTRAIN TOE LOG.
7. COCONUT EROSION CONTROL BLANKET SHALL BE ABLE TO WITHSTAND 10 FPS WATER VELOCITIES AND 4.46 PSF SHEAR STRESS. FABRIC EMBEDMENT 3.0 FT.

FASCINE BANK TREATMENT - (AML 60-20-3)

KY DAML 1–2013

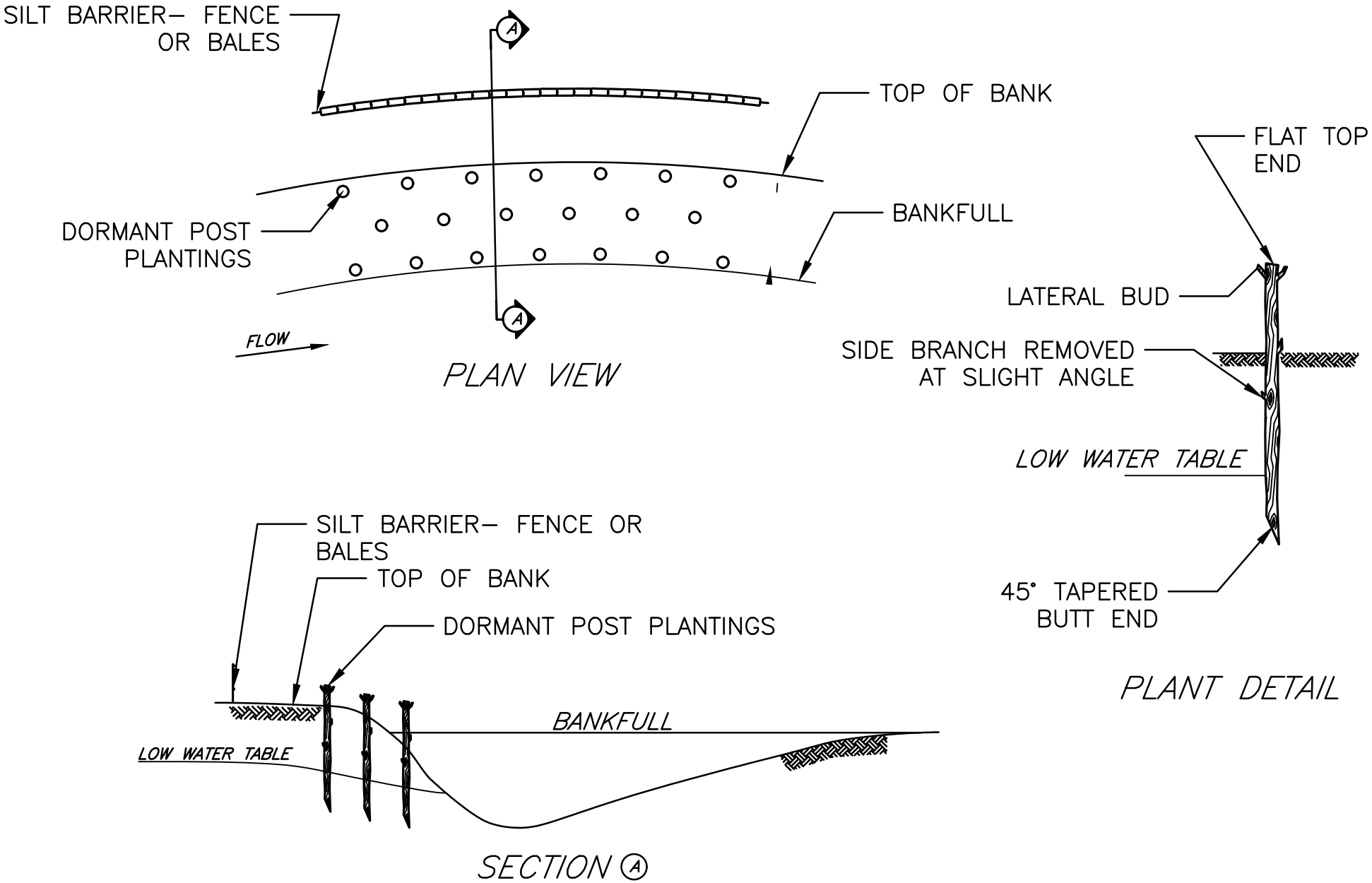

DORMANT POST PLANTING - (AML 60-20-4)

KY DAML 1–2013

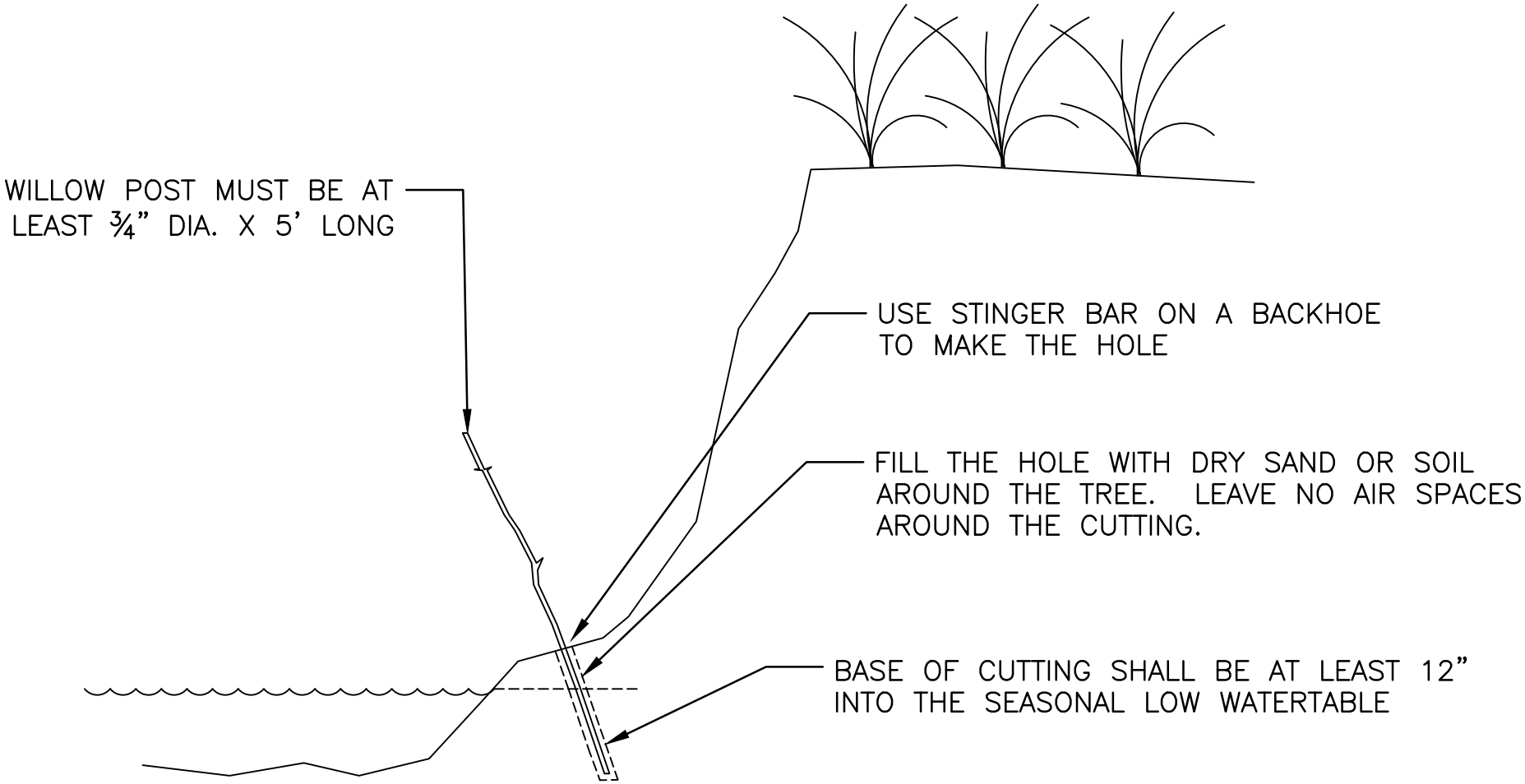

DORMANT TREE PLANTINGS- WILLOW POST (AML 60-20-5)

KY DAML 1-2013

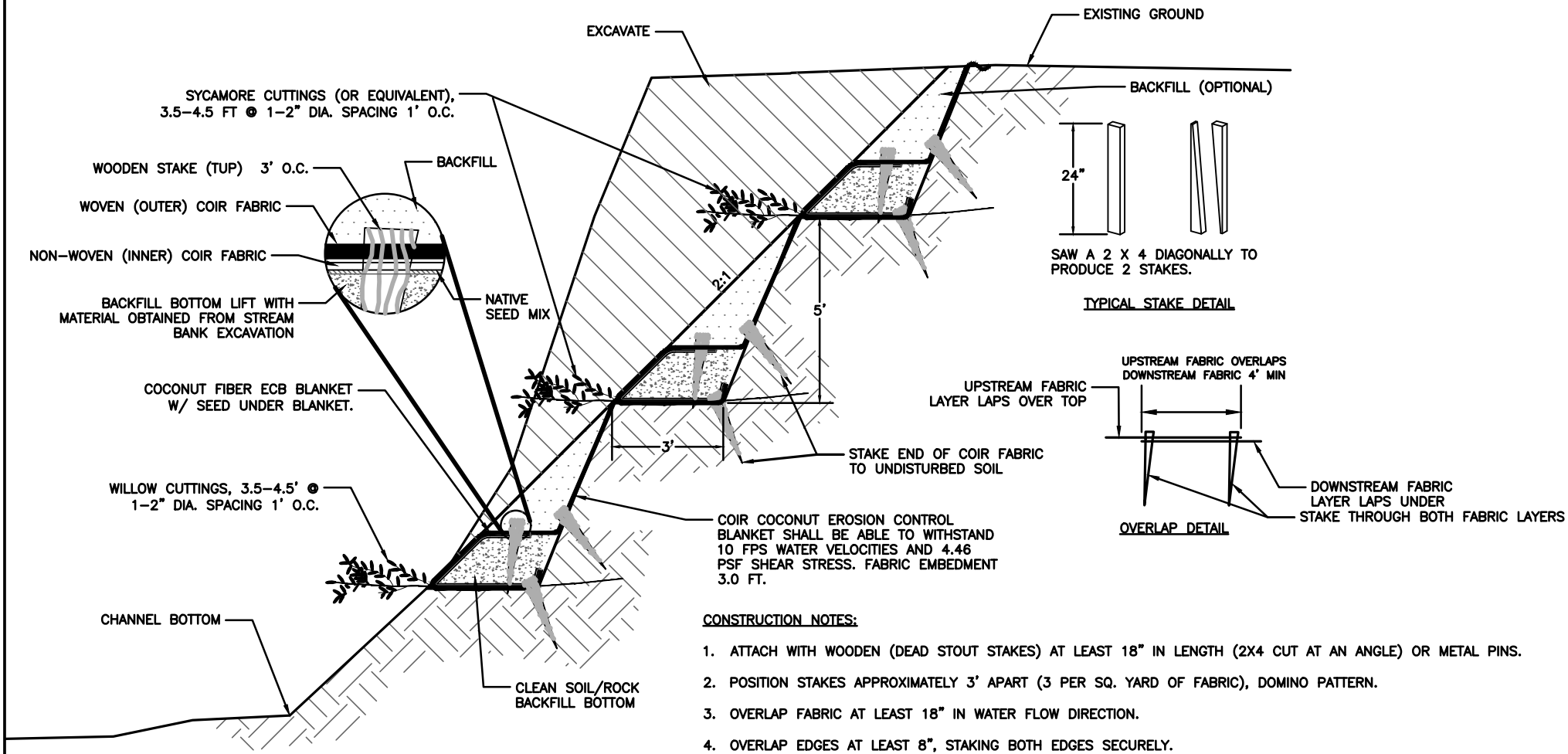

CONSTRUCTION NOTES:

1. ATTACH WITH WOODEN (DEAD STOUT STAKES) AT LEAST 18" IN LENGTH (2X4 CUT AT AN ANGLE) OR METAL PINS.
2. POSITION STAKES APPROXIMATELY 3' APART (3 PER SQ. YARD OF FABRIC), DOMINO PATTERN.
3. OVERLAP FABRIC AT LEAST 18" IN WATER FLOW DIRECTION.
4. OVERLAP EDGES AT LEAST 8", STAKING BOTH EDGES SECURELY.
5. CHECK SLOTS WITH FABRIC BURIED AT LEAST 6" DEEP SHOULD BE USED EVERY 25' IN WATERWAYS OR DITCHES.
6. THE FABRIC SHOULD BE BURIED IN ANCHOR TRENCHES AT LEAST 10" DEEP AT THE TOP AND BOTTOM ENDS OF AN INSTALLATION TO PREVENT UNDERCUTTING OF THE FABRIC.
7. PROVIDING ALL STAKES IS INCIDENTAL TO ECB.

BANK SHAPING - (AML 60-20-6)

KY DAML 1–2013

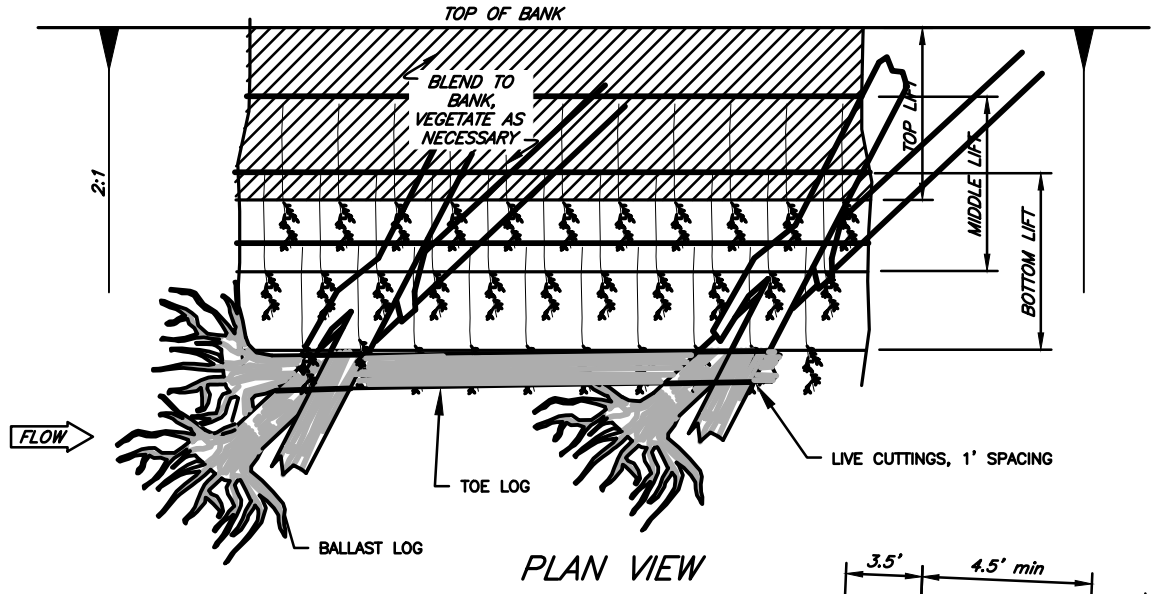

PLAN VIEW

GENERAL NOTES

1. MINIMUM LENGTH OF LIVE CUTTINGS SHALL BE 4' TO 6' WITH A DIAMETER OF 1/2" TO 2".
2. EMBED LIVE CUTTINGS 4 FEET INTO REINFORCED EARTH.
3. INSTALLATION SHALL OCCUR WHILE VEGETATION IS DORMANT.
4. LOGS SHALL BE 1.5'ø, 20' LONG WITH 4' ROOTWAD. EMBED BALLAST LOGS 13' MIN. INTO BANK. BALLAST LOG SHALL BE PLACED WITH A "TIGHT" CONNECTION TO RESTRAIN TOE LOG.

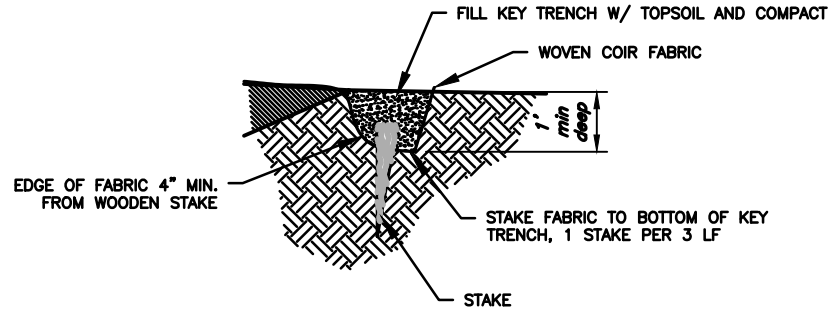

KEY TRENCH DETAIL

NOTES:

*NUMBER OF LIFTS MAY VARY

FILL: TOPSOIL, STONE, OR SPAWNING GRAVEL

FABRIC: NON-WOVEN COIR (INNER) AND WOVEN COIR (OUTER)

COCONUT EROSION CONTROL BLANKET SHALL BE ABLE TO WITHSTAND 10 FPS WATER VELOCITIES AND 4.46 PSF SHEAR STRESS. FABRIC EMBEDMENT 3.0 FT.

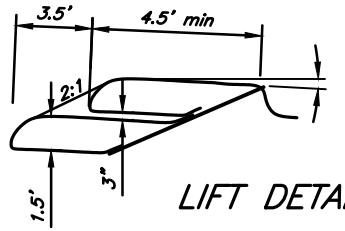

LIFT DETAILS

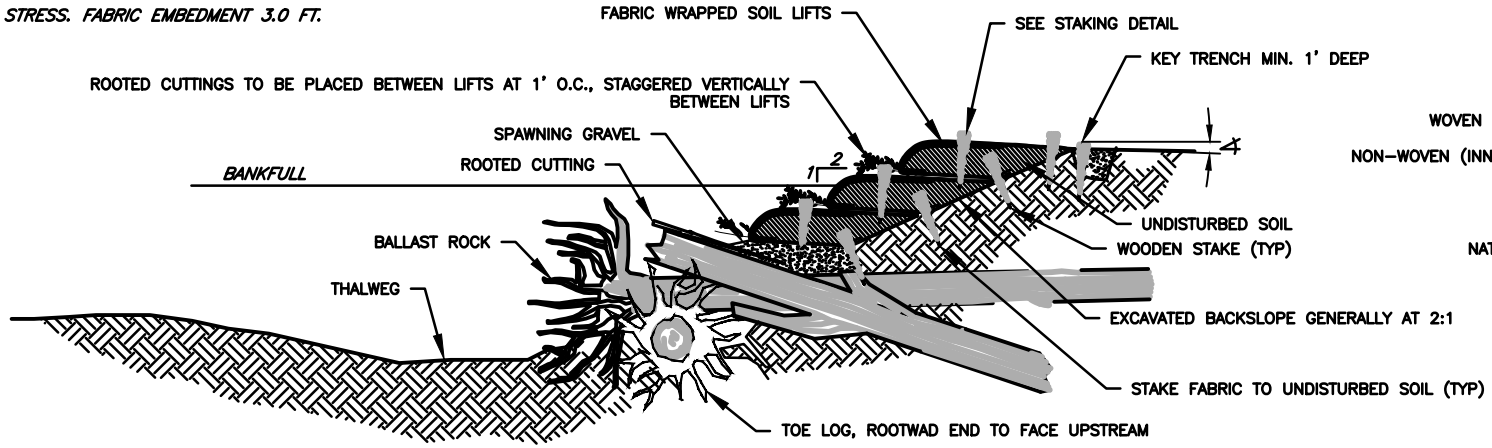

SECTION

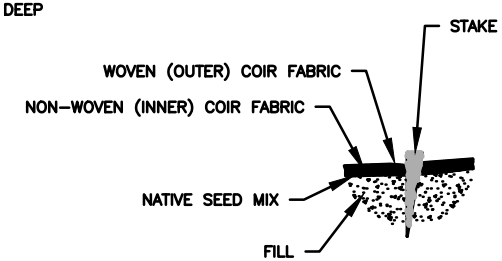

STAKING DETAIL

REINFORCED EARTH BANK TREATMENT - (AML 60-20-7)

KY DAML 1-2013

FIG 1. PLACE A ROW OF CONSTRUCTION FORMS ALONG DESIRED CHANNEL ALIGNMENT FOR FIRST LIFT.

FIG 2. CONSTRUCT FABRIC WRAP LIFTS ALONG LENGTH OF FIRST SET OF FORMS AND THEN BEGIN PLACEMENT OF FORMS AND CONSTRUCTION OF SECOND LIFT.

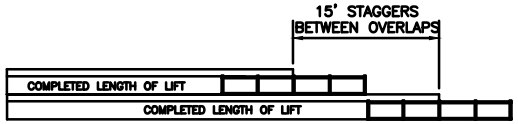

FIG 3. STAGGER FABRIC OVERLAPS A MINIMUM OF 15' BETWEEN LIFTS.

SUGGESTED SEQUENCE FOR PLACEMENT OF FORMS

PROFILE VIEW LOOKING INTO BANK

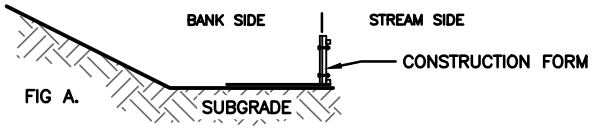

FIG A.

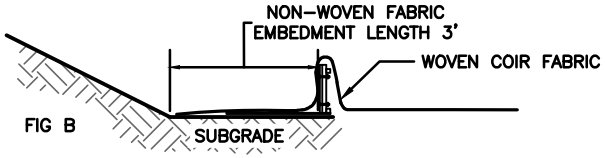

FIG B

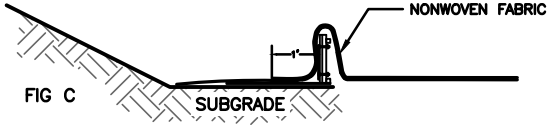

FIG C

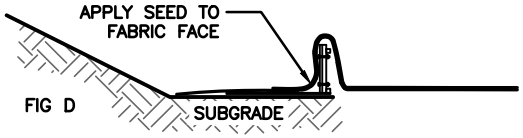

FIG D

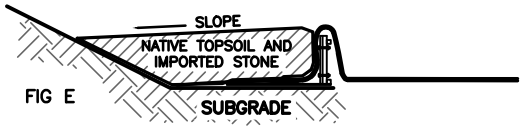

FIG E

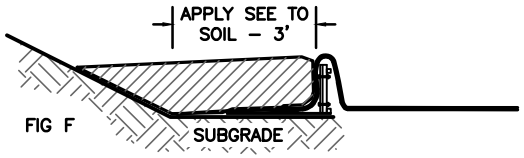

FIG F

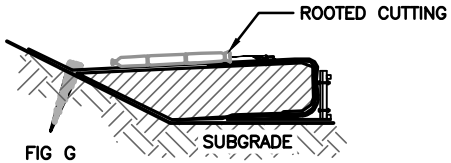

FIG G

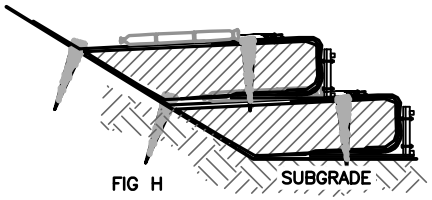

FIG H

GENERAL INSTRUCTIONS FOR CONSTRUCTING REINFORCED EARTH LIFTS

1. BANKS MAY BE CONSTRUCTED IN EITHER AN UPSTREAM OR DOWNSTREAM DIRECTION, AS LONG AS THE FABRIC IS OVERLAPPED IN THE PROPER DIRECTION.

2. CHECK PLANS AND SPECIFICATIONS: EACH LIFT MAY HAVE A UNIQUE FILL COMPOSITION AND VARYING PLACEMENT OF ROOTED CUTTINGS.

3. PLACE A SERIES OF THREE OR MORE FORMS ON THE GROUND SO THAT THE FORMS FOLLOW THE PROPOSED STREAM BANK ALIGNMENT. BUTT THE ENDS OF THE FORMS TIGHTLY TOGETHER.

4. UNROLL THE WOVEN COIR FABRIC PARALLEL TO THE LONG AXIS OF THE CHANNEL AND POSITION IT SO THAT 3.0 FEET EXTENDS FOR EMBEDMENT ON THE BANK SIDE OF THE FORMS (FIG. B), AND A MINIMUM 3 FEET EXTENDS LENGTHWISE BEYOND THE LAST FORM FOR OVERLAP. DRAPE THE REMAINDER OF THE FABRIC OVER THE TOP OF THE FORMS ON THE STREAM SIDE (FIG. B).

5. UNROLL THE NONWOVEN COIR FABRIC OVER THE TOP OF THE WOVEN COIR FABRIC (FIG. B) AND POSITION IT SO THAT AT LEAST 1 FOOT OF THE INNER FABRIC EXTENDS AS AN EMBEDMENT LENGTH ON THE BANK SIDE OF THE FORMS (FIG. C). DRAPE THE REMAINDER OF THE FABRIC OVER THE TOP OF THE FORMS ON THE STREAM SIDE AND ALIGN THE LONG EDGES OF THE COIR FABRICS. STRETCH AND PULL THE FABRIC LAYERS TO REMOVE WRINKLES.

6. APPLY NATIVE SEED MIX TO NONWOVEN COIR FABRIC ALONG VERTICAL EDGE OF LIFT (FIG. D). PLACE SPECIFIED FILL OVER THE FABRIC ON THE BANK SIDE OF THE FORMS. SLOPE THE FILL DOWNWARD TO THE BANK AND COMPACT TO 85–90 PERCENT STANDARD PROCTOR DENSITY (FIG. E).

7. APPLY NATIVE SEED MIX TO TOP OF FILL FROM THE FRONT OF THE LIFT TO 3 FT BACK FROM FRONT OF THE LIFT (FIG. F).

8. FOLD THE LOOSE ENDS OF THE TWO COIR FABRIC LAYERS BACK OVER THE COMPACTED FILL MATERIAL AND STRETCH TIGHTLY TO REMOVE WRINKLES (FIG. G). SECURE WITH WOODEN STAKES 1 PER 3 L.F. ALONG THE BACK EDGE AND INTO UNDISTURBED SOIL.

9. REMOVE THE FORMS FROM THE FRONT OF THE COMPLETED LIFTS (FIG. 2). LEAVE THE LAST FORM IN PLACE AT THE END OF THE NEWLY CONSTRUCTED LIFT (FIG. 2). PLACE ROOTED CUTTINGS ON TOP OF THE FINISHED LAYER FOR THE NEXT LIFT (FIG. G). PLACE A SMALL AMOUNT OF TOPSOIL AROUND THE BURLAP SOCK OF THE ROOTED CUTTING. CAREFULLY RESET THE FORMS ON TOP OF THE FINISHED LAYER FOR THE NEXT LIFT (FIG. H) TO AVOID DAMAGING THE ROOTED CUTTING.

10. PROCEED WITH A NEW SERIES OF LIFTS BY EXTENDING A NEW ROW OF FORMS. BEGINNING AT THE END FORM THAT WAS LEFT IN PLACE, LAY OUT TWO NEW LAYERS OF FABRIC AS PREVIOUSLY DESCRIBED, MAKING SURE TO OVERLAP THE NEW FABRIC LAYERS WITH THE PREVIOUS LAYERS. STAGGER OVERLAPS, BETWEEN ADJACENT LIFTS BY A MINIMUM OF 15 FEET (FIG. 2).

11. ON THE TOP LIFT, EXCAVATE A KEY TRENCH 1.5 FEET WIDE AND 1 FOOT DEEP ALONG THE EDGE OF THE WOVEN COIR FABRIC LAYER, PARALLEL TO THE FORMS. SECURE FABRIC IN THE KEY TRENCH WITH WOODEN STAKES, 3 FT O.C..

12. BACKFILL THE KEY TRENCH WITH TOPSOIL AND CONTINUE TO APPLY TOPSOIL TO SMOOTHLY MERGE WITH EXISTING CONTOURS. APPLY NATIVE SEED MIX TO KEY TRENCH AREA.

USE WITH AML 60–10–5

REINFORCED EARTH BANK INSTRUCTIONS - (AML 60-20-8)

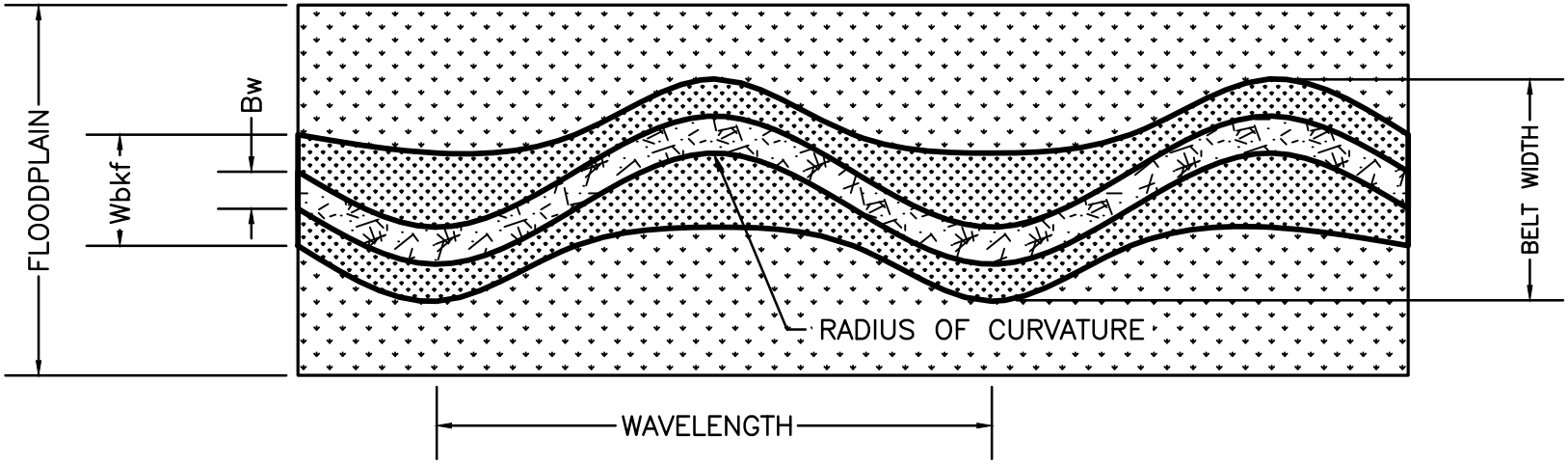

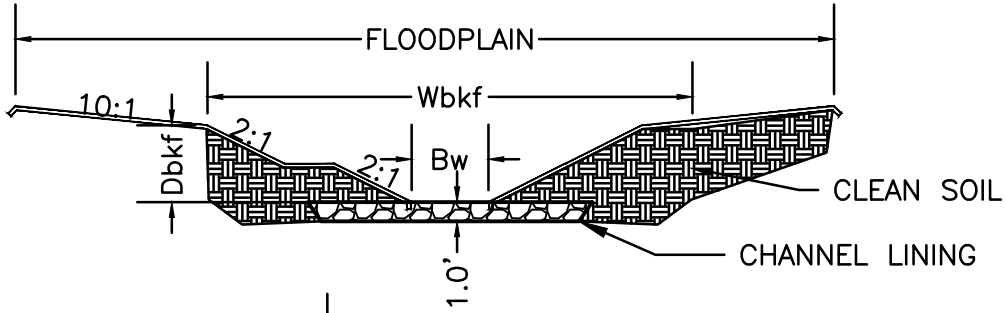

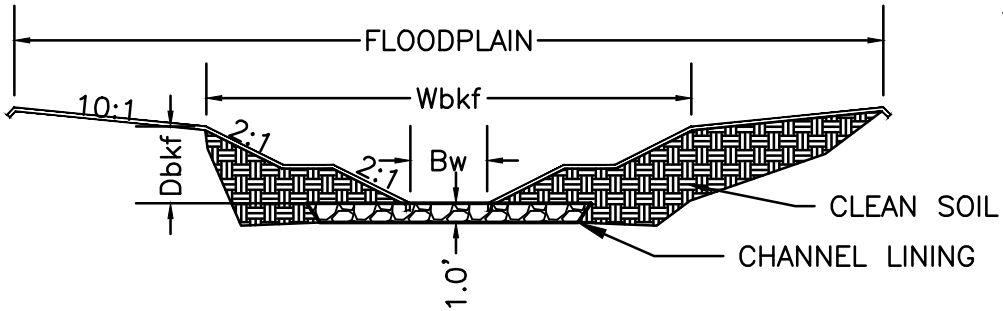

Wbkf– BANKFULL WIDTH
Dbkf– BANKFULL MEAN DEPTH

Bw– LOW–FLOW BASE WIDTH

SEE DRAWINGS AND SPECIAL CONDITIONS FOR PROJECT SPECIFIC MEASUREMENTS

THREE STAGE CHANNEL (AML 60-30-1)

KY DAML 1–2013

PLAN VIEW: STEP POOL

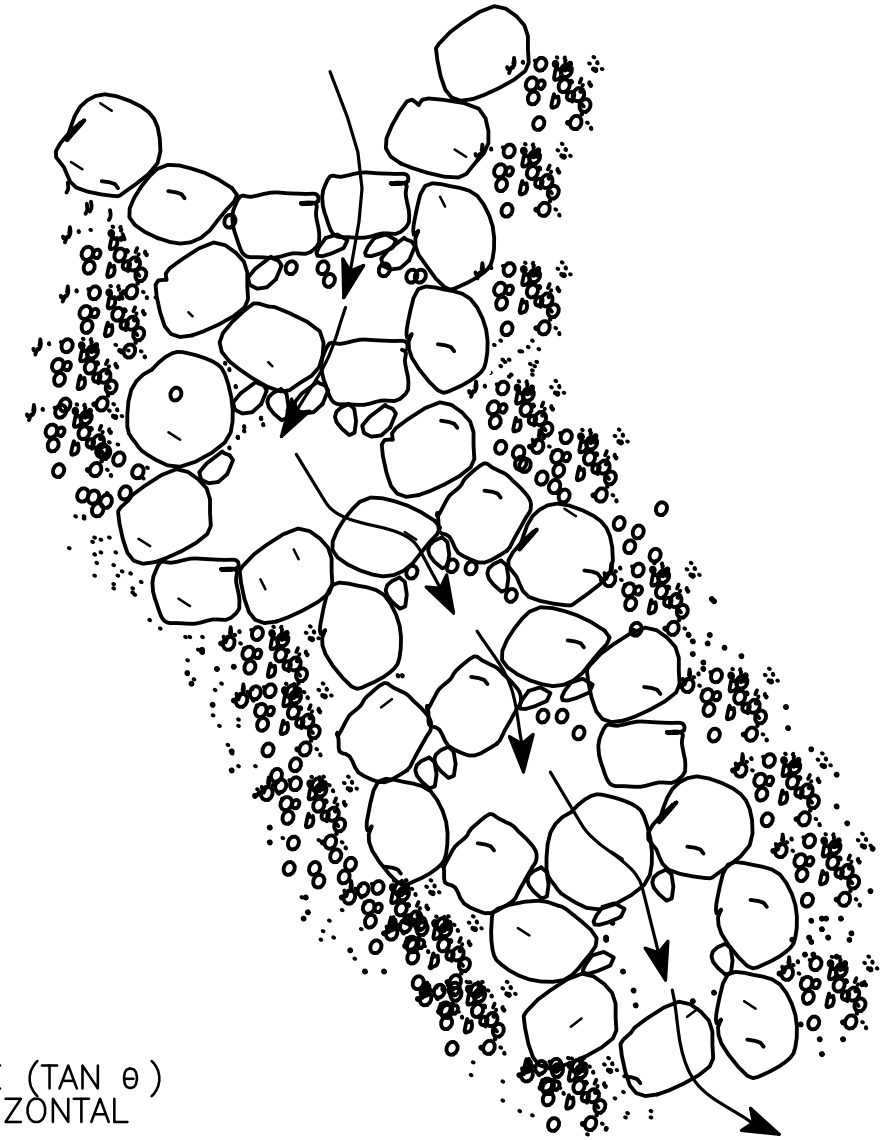

DEFINITION SKETCH:
STEP POOL

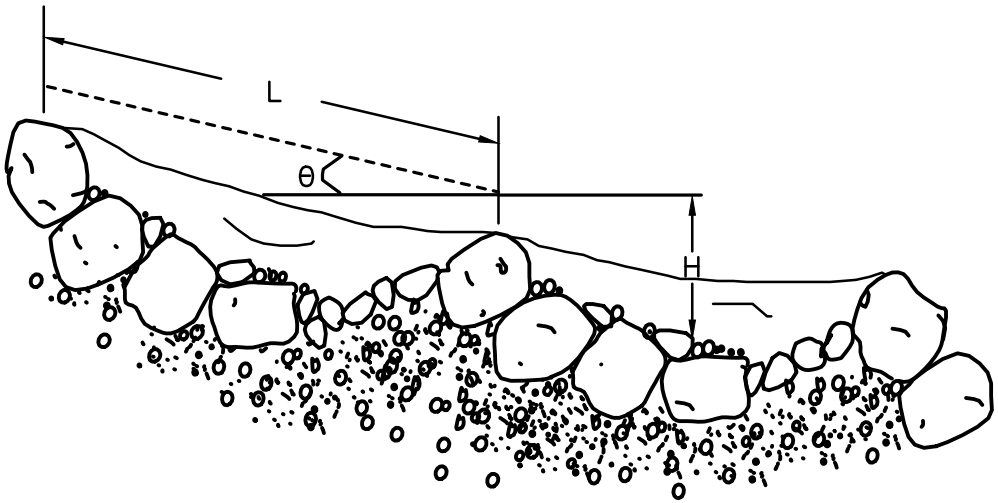

NOTE:
L IS MEASURED PARALLEL TO THE BED SLOPE (TAN θ)
H IS MEASURED PERPENDICULAR TO THE HORIZONTAL

STEP POOL- PART A (AML 60-30-2)

KY DAML 1–2013

PROFILE VIEW:
CASCADE & STEP POOL MORPHOLOGIES

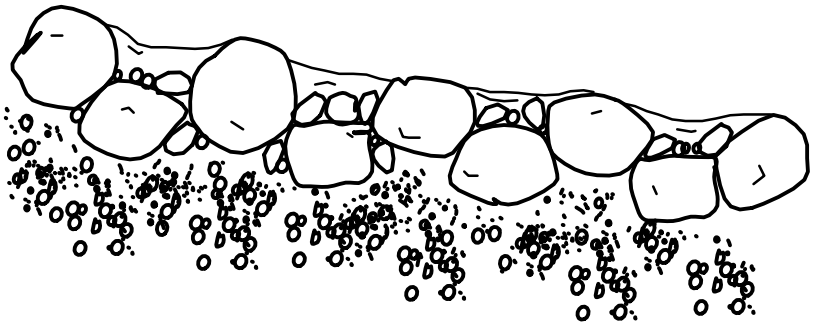

APPROXIMATE CHANNEL SLOPE: >0.065 FT/FT	TYPICAL POOL SPACING: <1 CHANNEL WIDTH	AVERAGE STEP HEIGHT (ABRAHAMS et al., 1995) $1<(H/L)_{AVE}/S<2$

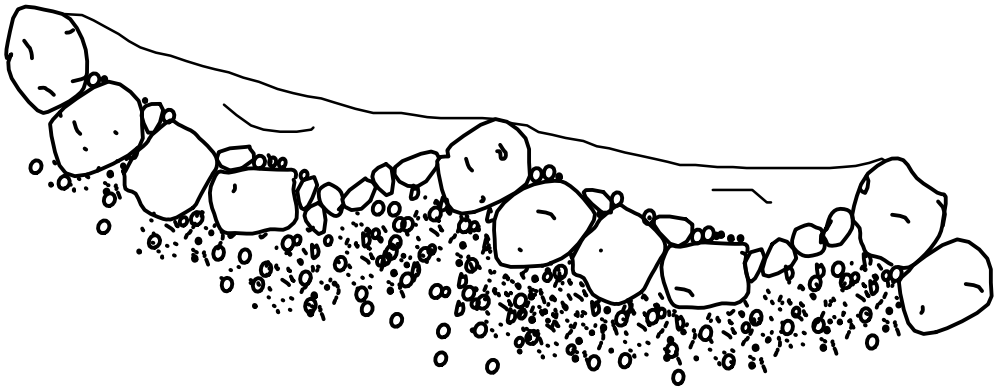

S = SLOPE

APPROXIMATE CHANNEL SLOPE: 0.030–0.065 FT/FT	TYPICAL POOL SPACING: 1–4 CHANNEL WIDTHS	AVERAGE STEP HEIGHT (ABRAHAMS et al., 1995) $1<(H/L)_{AVE}/S<2$

STEP POOL- PART B (AML 60-30-3)

KY DAML 1–2013

PLAN VIEW: LOG VANE

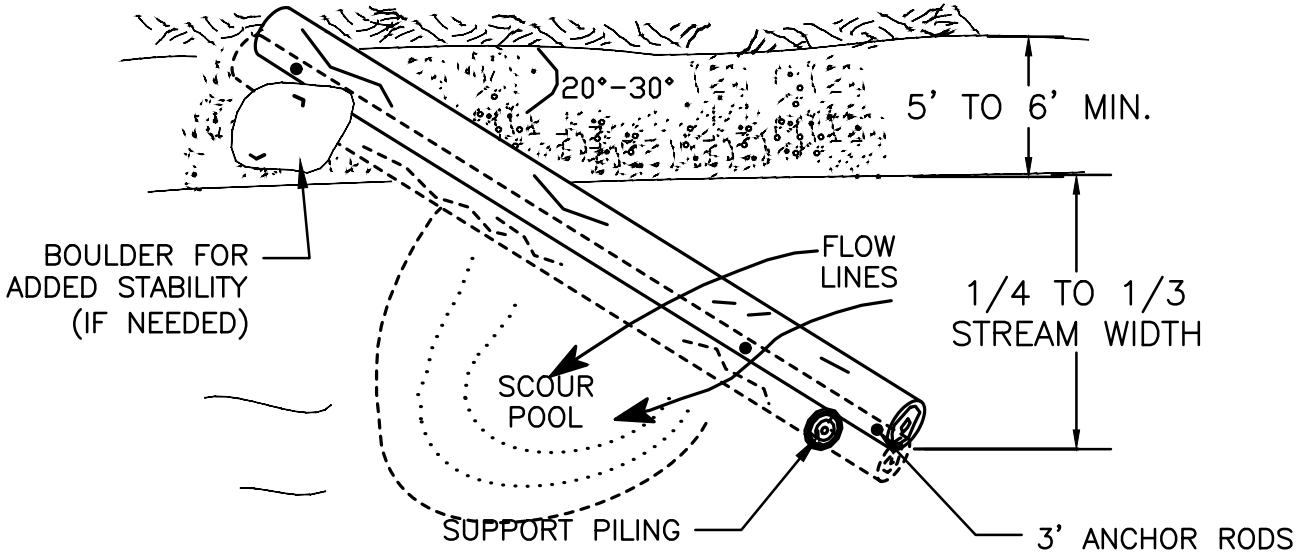

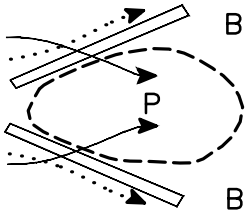

SYMMETRICAL

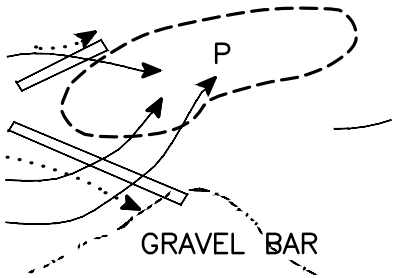

ASYMMETRICAL

SECTION VIEW: LOG VANE

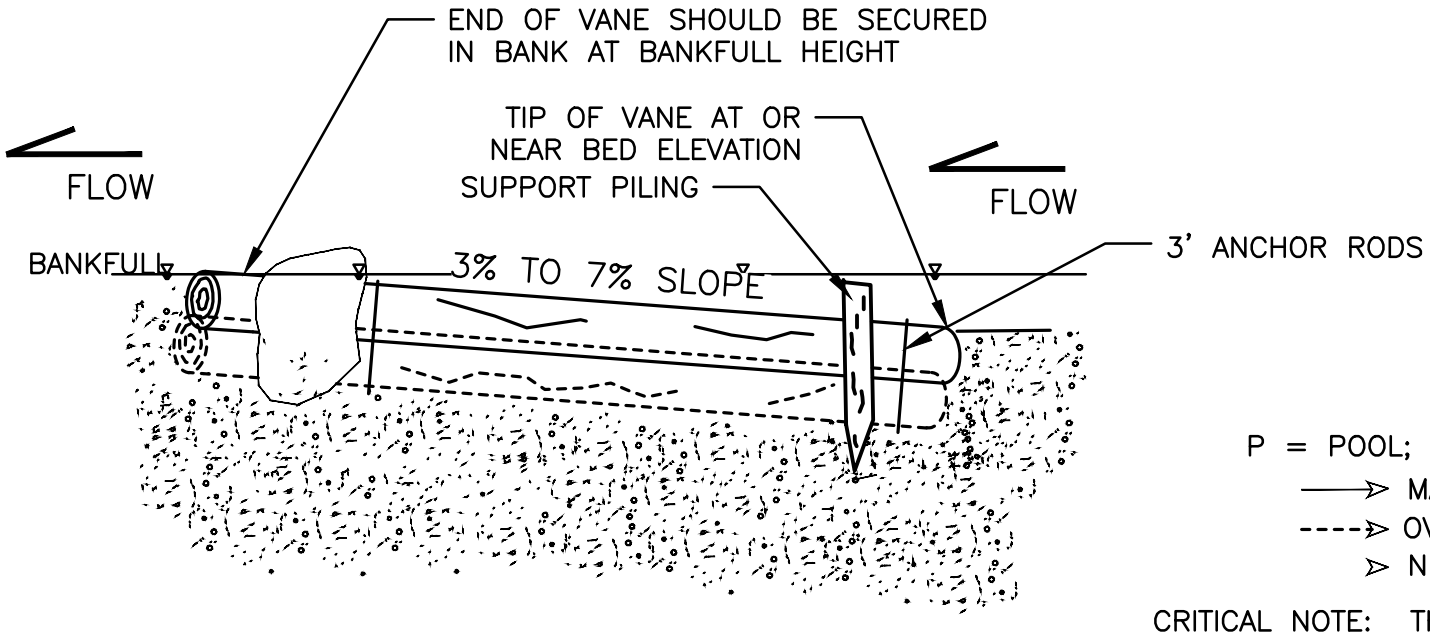

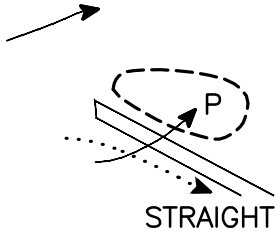

STRAIGHT

P = POOL; B = BAR; E = BANK EROSION

⟶ MAIN/SURFACE FLOW;

----> OVER TOPPING FLOW

> NEAR BED FLOW;

CRITICAL NOTE: THIS FEATURE DIPS DOWN AS GOES UPSTREAM.

LOG VANE (AML 60-40-1)

KY DAML 1-2013

PLAN VIEW: ROCK VANE

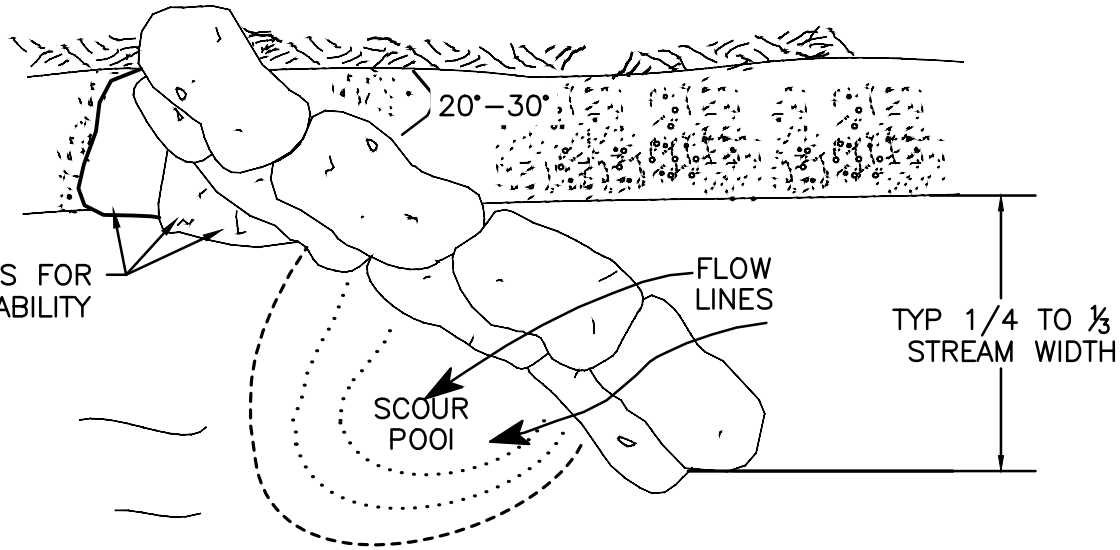

SECTION VIEW: ROCK VANE

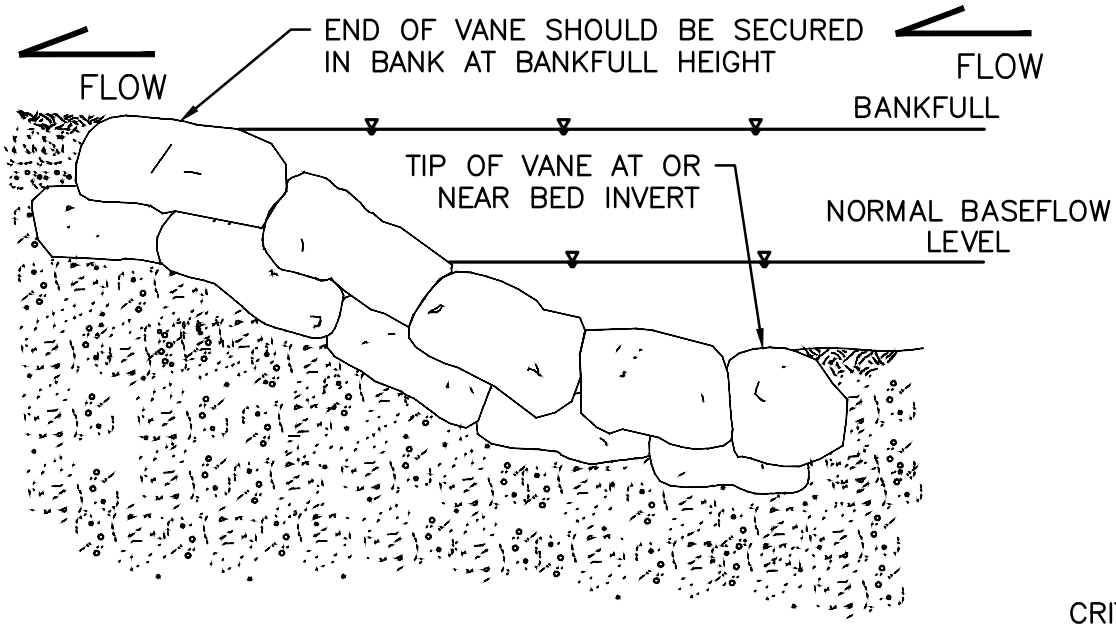

PROFILE VIEW: STRAIGHT VANE

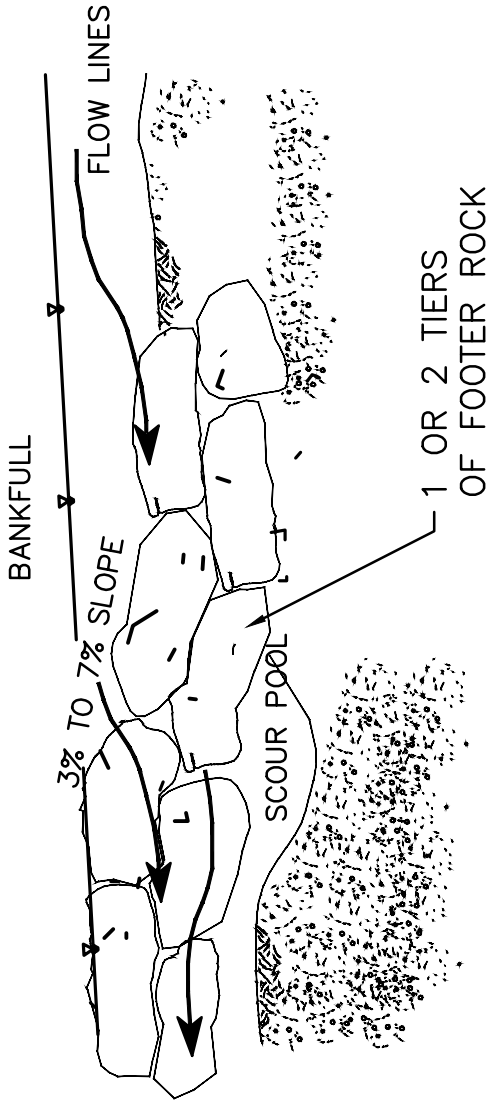

CRITICAL NOTE: THIS FEATURE DIPS DOWN AS GOES UPSTREAM.

ROCK VANE (AML 60-40-2)

KY DAML 1–2013

PLAN VIEW: J–HOOK VANE

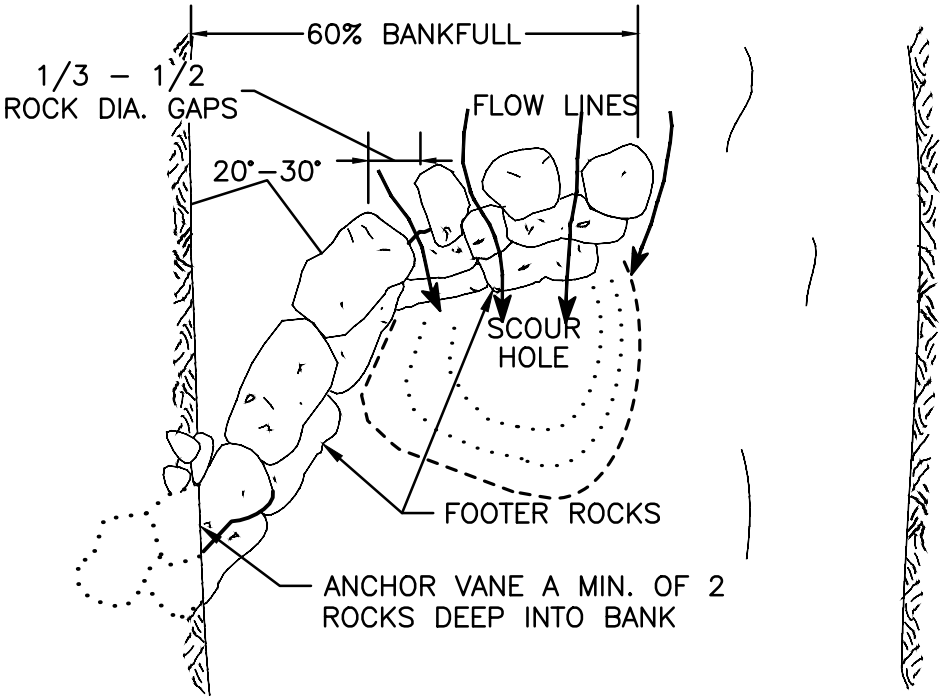

PROFILE VIEW OF VANE ARM

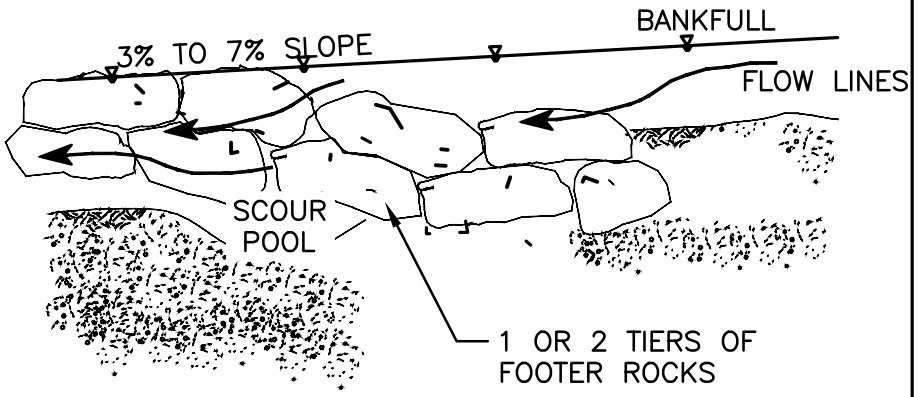

SECTION VIEW: J–HOOK VANE

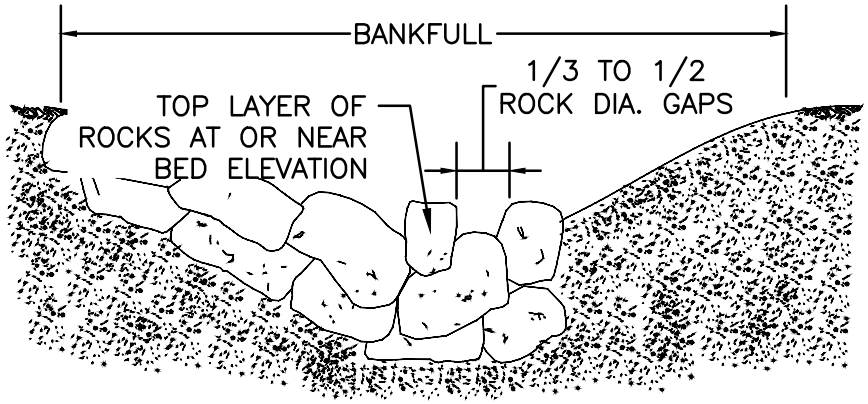

PROFILE VIEW OF J–HOOK

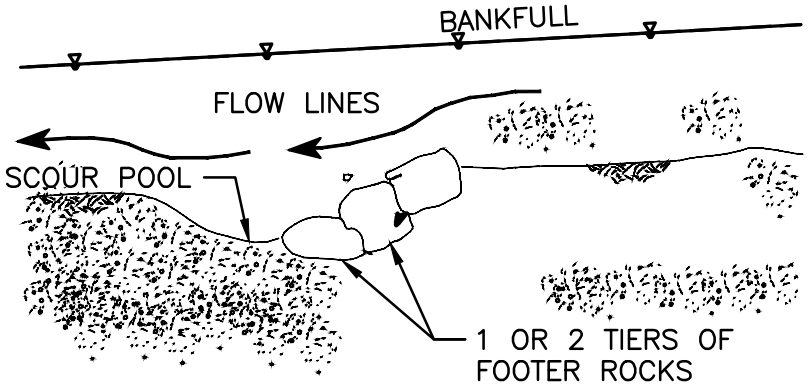

CRITICAL NOTE: THIS FEATURE DIPS DOWN AS GOES UPSTREAM.

J-HOOK VANE (AML 60-40-3)

KY DAML 1–2013

PLAN VIEW: LOG DEFLECTOR

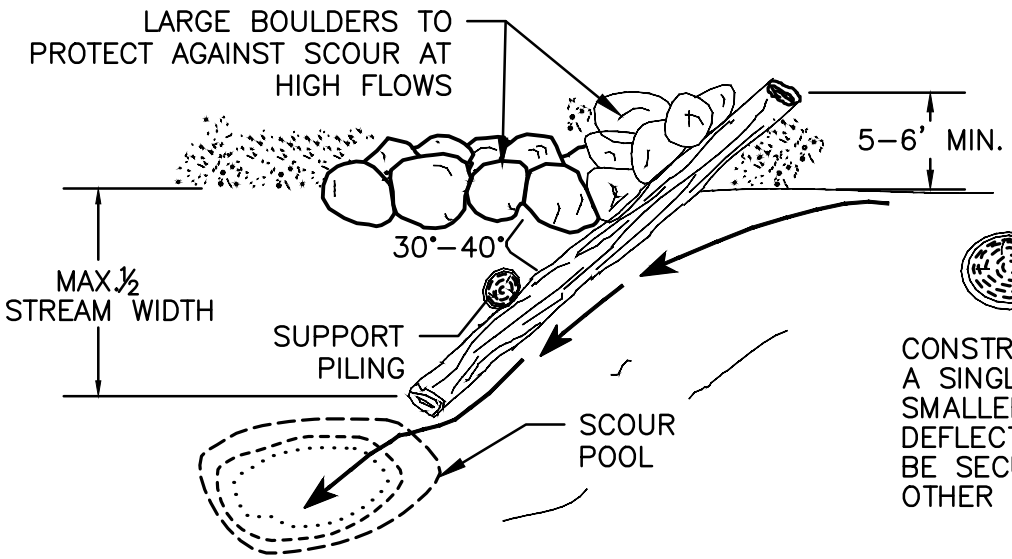

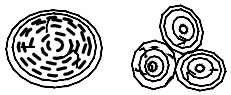

CONSTRUCTION NOTE:
A SINGLE LARGE LOG OR MULTIPLE SMALLER LOGS CAN BE USED FOR DEFLECTORS; SMALLER LOGS SHALL BE SECURELY ANCHORED TO EACH OTHER WITH METAL RODS

SECTION VIEW: LOG DEFLECTOR

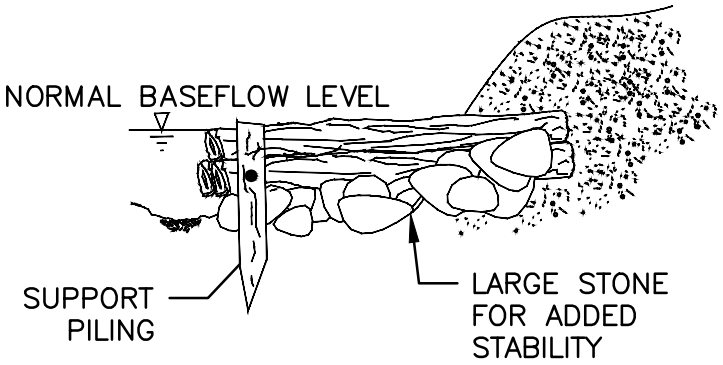

PLAN VIEW: LOG FRAME DEFLECTOR

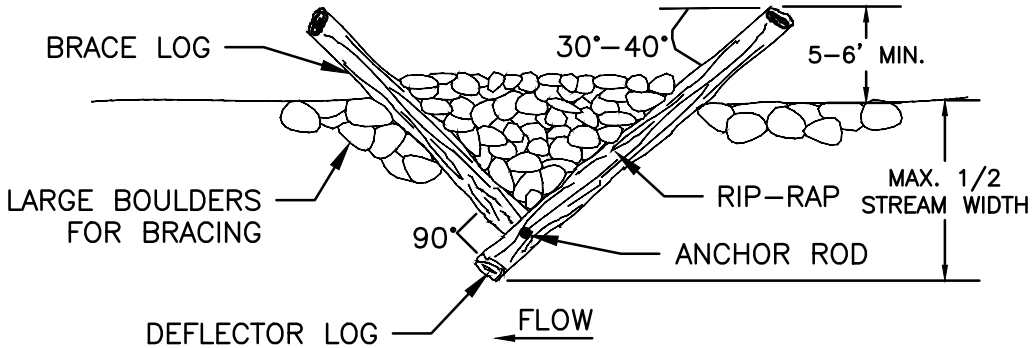

STREAM DEFLECTORS (AML 60-40-4)

KY DAML 1–2013

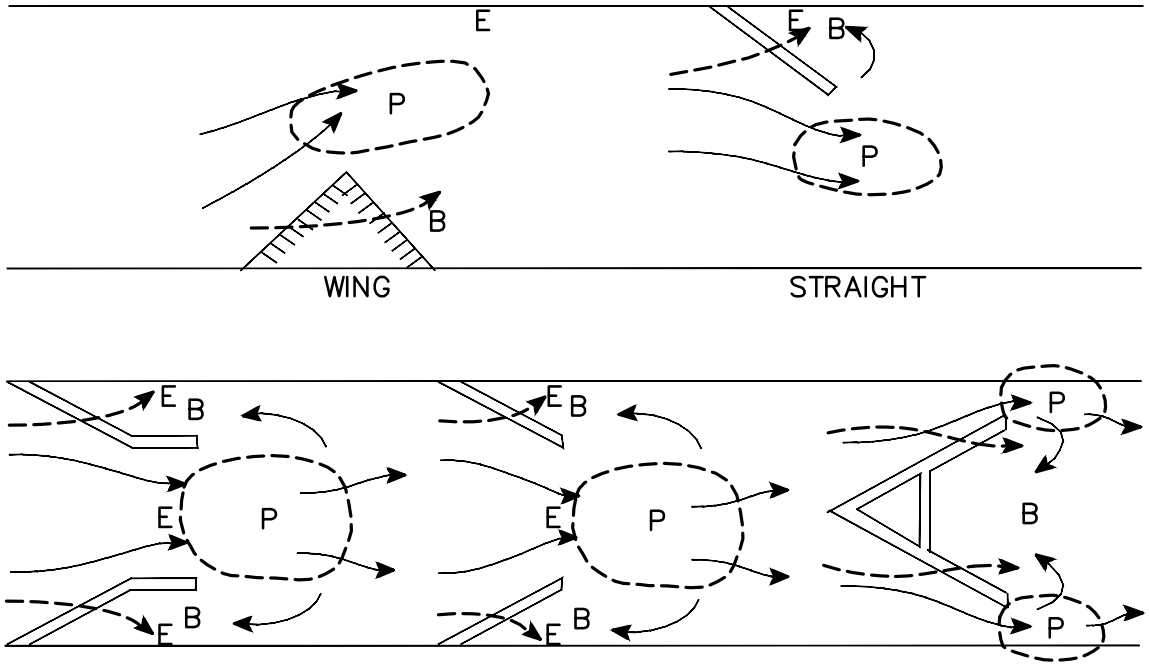

LEGEND:

P = POOL; B =, BAR; E = BANK EROSION

⟶ MAIN/SURFACE FLOW; - - - ⟶ OVER TOPPING FLOW

····· ⟶ NEAR BED FLOW;

USE WITH AML 60–40–4

STREAM DEFLECTORS- ALTERNATIVE CONFIGURATIONS (AML 60-40-5)

PLAN VIEW: CROSS VANE

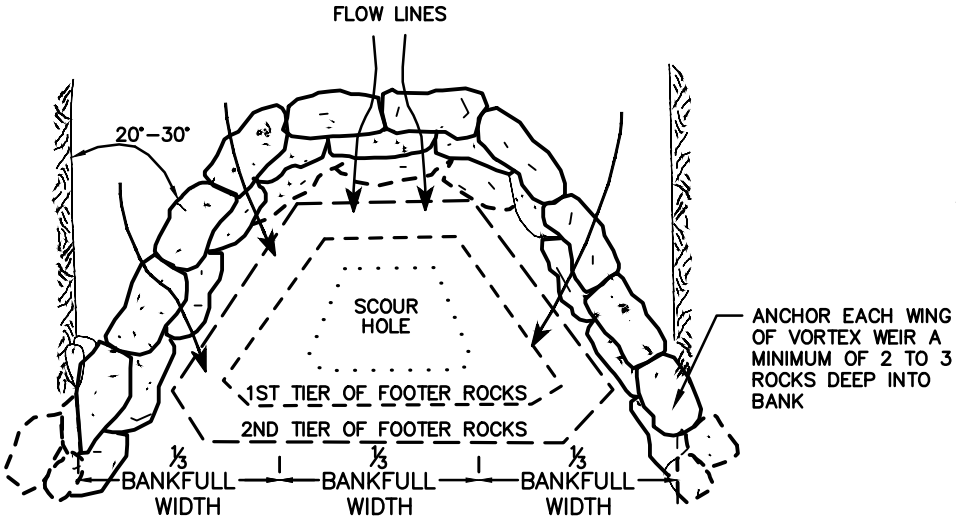

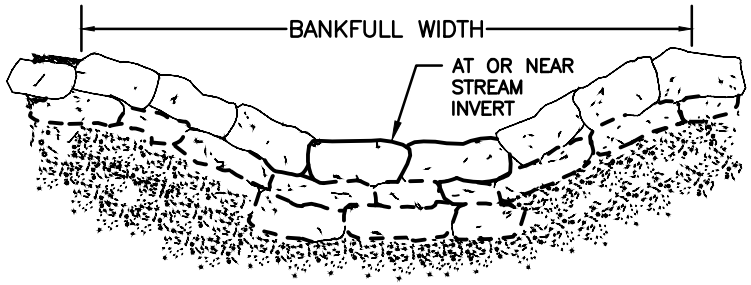

SECTION VIEW: CROSS VANE

PROFILE: CROSS VANE ARM

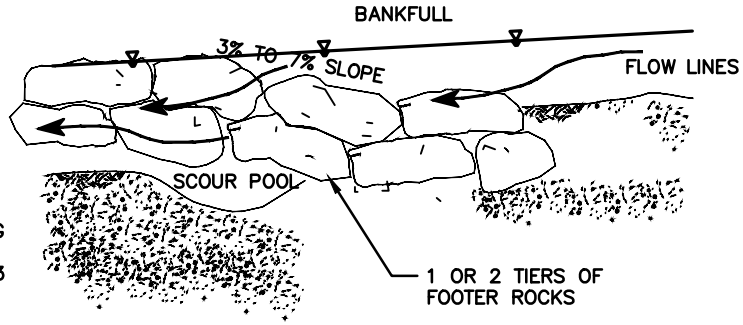

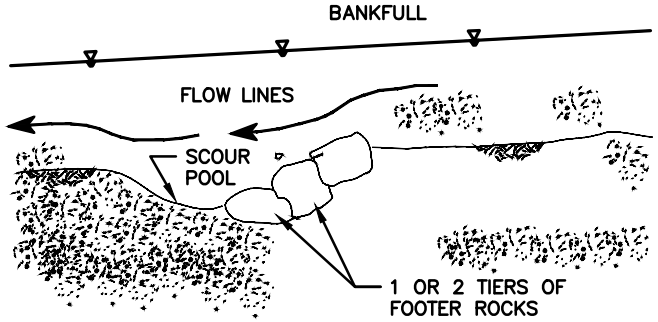

PROFILE VIEW OF CENTER OF CROSS VANE

CRITICAL NOTE: THIS FEATURE DIPS DOWN AS GOES UPSTREAM.

CROSS VANE (AML 60-40-6)

PLAN VIEW: W–ROCK WEIR

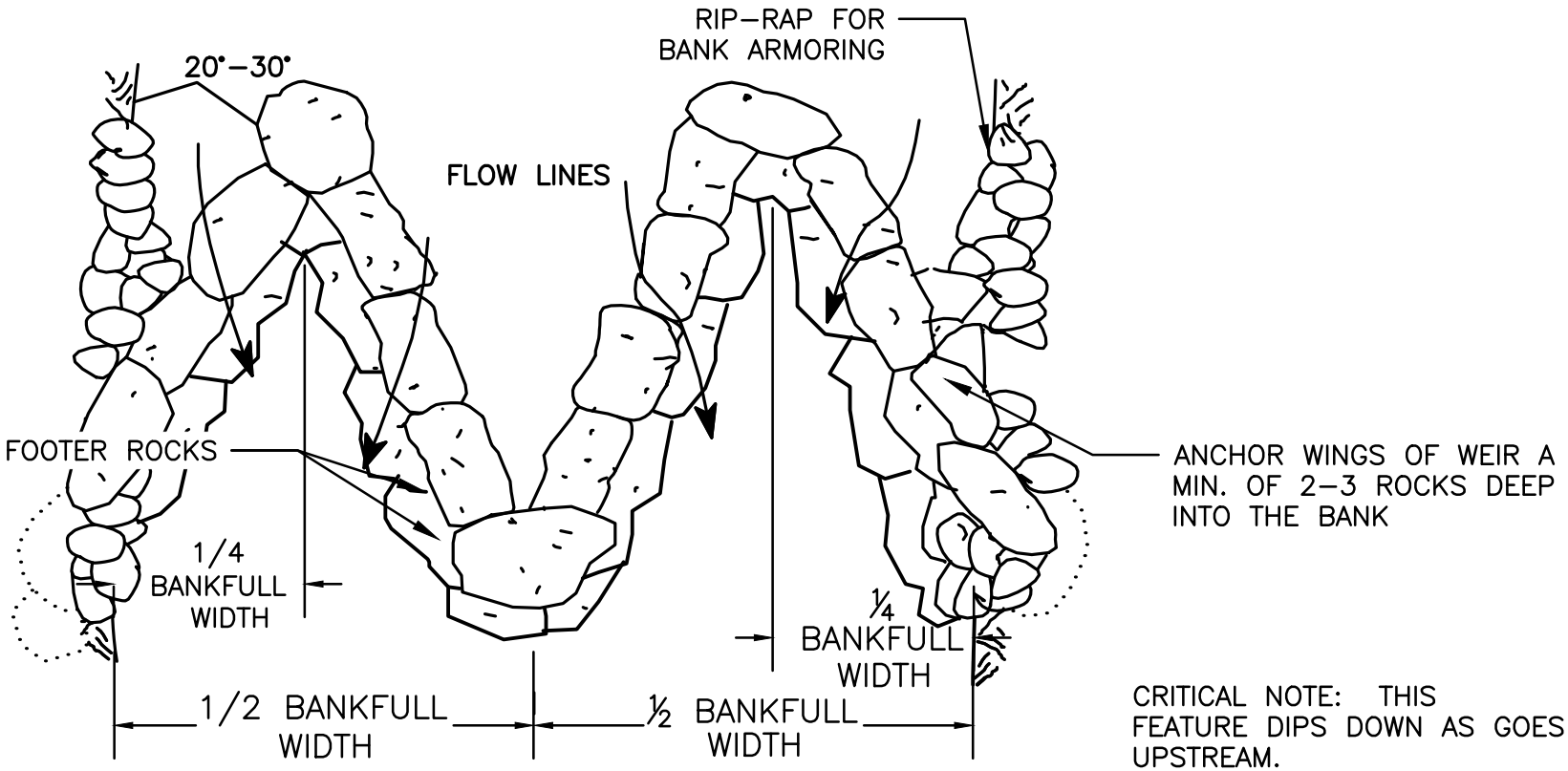

CRITICAL NOTE: THIS FEATURE DIPS DOWN AS GOES UPSTREAM.

SECTION VIEW: W–ROCK WEIR

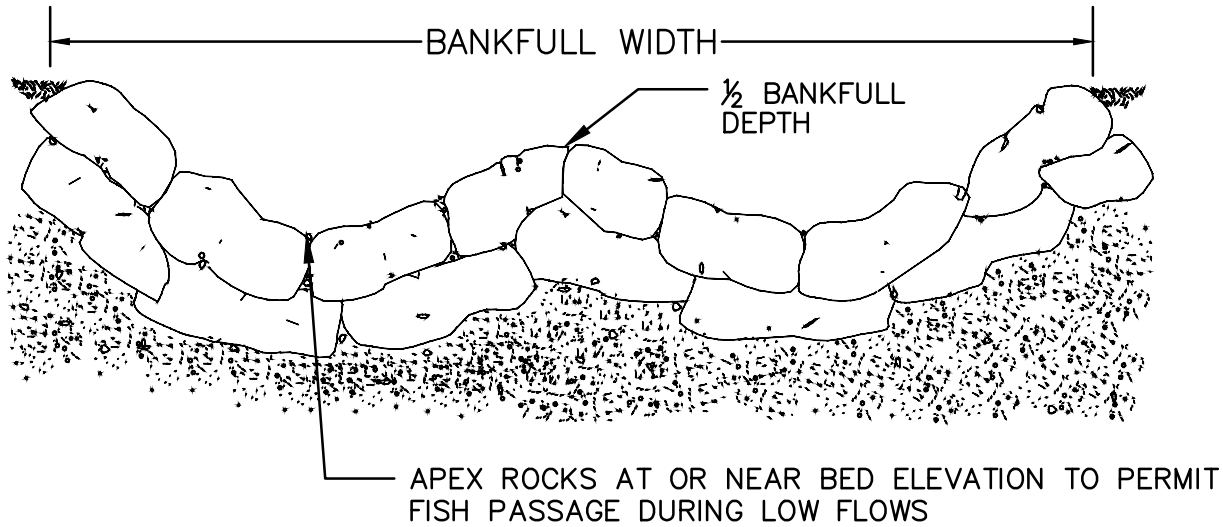

"W" WEIR (AML 60-40-7)

KY DAML 1–2013

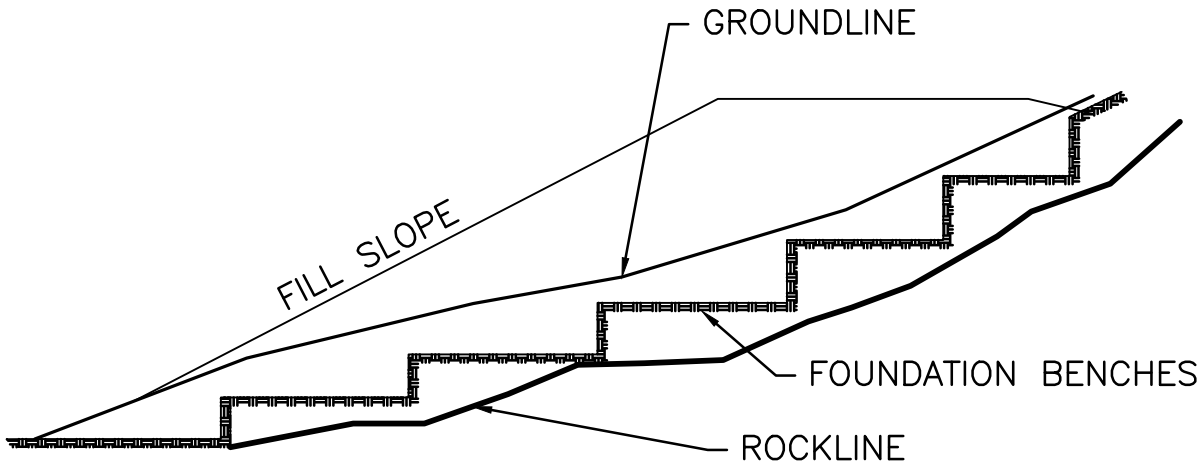

1. THIS TREATMENT FOR EMBANKMENT FOUNDATION BENCHES AS INDICATED ON THIS SHEET SHALL BE ACCEPTED AS GUIDES, HOWEVER, ALL THE CONDITIONS THAT WILL BE ENCOUNTERED CANNOT BE SHOWN, THEREFORE, THE DESIGN ENGINEER AND/OR CONTRACTOR MUST GIVE CONSIDERABLE THOUGHT TO THE LOCATION AND DIMENSIONS OF THESE BENCHES.

2. DEFINITE DESIGN INFORMATION CANNOT BE ESTABLISHED AS TO SIZE OF THESE BENCHES, DUE TO IRREGULARITIES AND THE DIFFERENT RATES OF INCLINE OF THE EXISTING CROSS SECTION. HOWEVER, IT IS GENERALLY BELIEVED THAT A 6' TO 12' RISE AND A 20' TO 35' HORIZONTAL RUN ARE FAIRLY TYPICAL WITH A 15' HORIZONTAL RUN BEING THE MINIMUM.

3. WHEN THE INCLINE OF THE CROSS SECTIONS IS 15% OR GREATER THESE EMBANKMENT FOUNDATION BENCHES SHALL BE CONSTRUCTED IN THE ORIGINAL SLOPE AS THE EMBANKMENT IS CONSTRUCTED IN COMPACTED LAYERS OR LIFTS.

4. WHEN EMBANKMENT FOUNDATION BENCHES ARE SHOWN ON THE CROSS SECTION, THE VOLUME SHALL BE INCIDENTAL.

5. NO QUANTITIES WILL BE ALLOWED FOR THE REFILLING OF THESE BENCHES, SINCE SUPPOSEDLY; THE MATERIAL THAT WAS EXCAVATED WILL BE PROCESSED AND PLACED BACK IN THESE BENCHES.

SLOPE OR EMBANKMENT FOUNDATION BENCHES (AML 70-10-1)

1. ALL FINAL GRADE AREAS SHOULD HAVE BENCHES CREATED WITH BENCH DIVERSIONS TO CENTRAL DRAINAGE CHANNELS.

2. LINE BENCH CHANNELS WITH TYPE A ECB (EROSION CONTROL BLANKET). BENCH SPACING AND GRADES MAY BE ADJUSTED AT THE ENGINEERS DIRECTION IN THE FIELD.

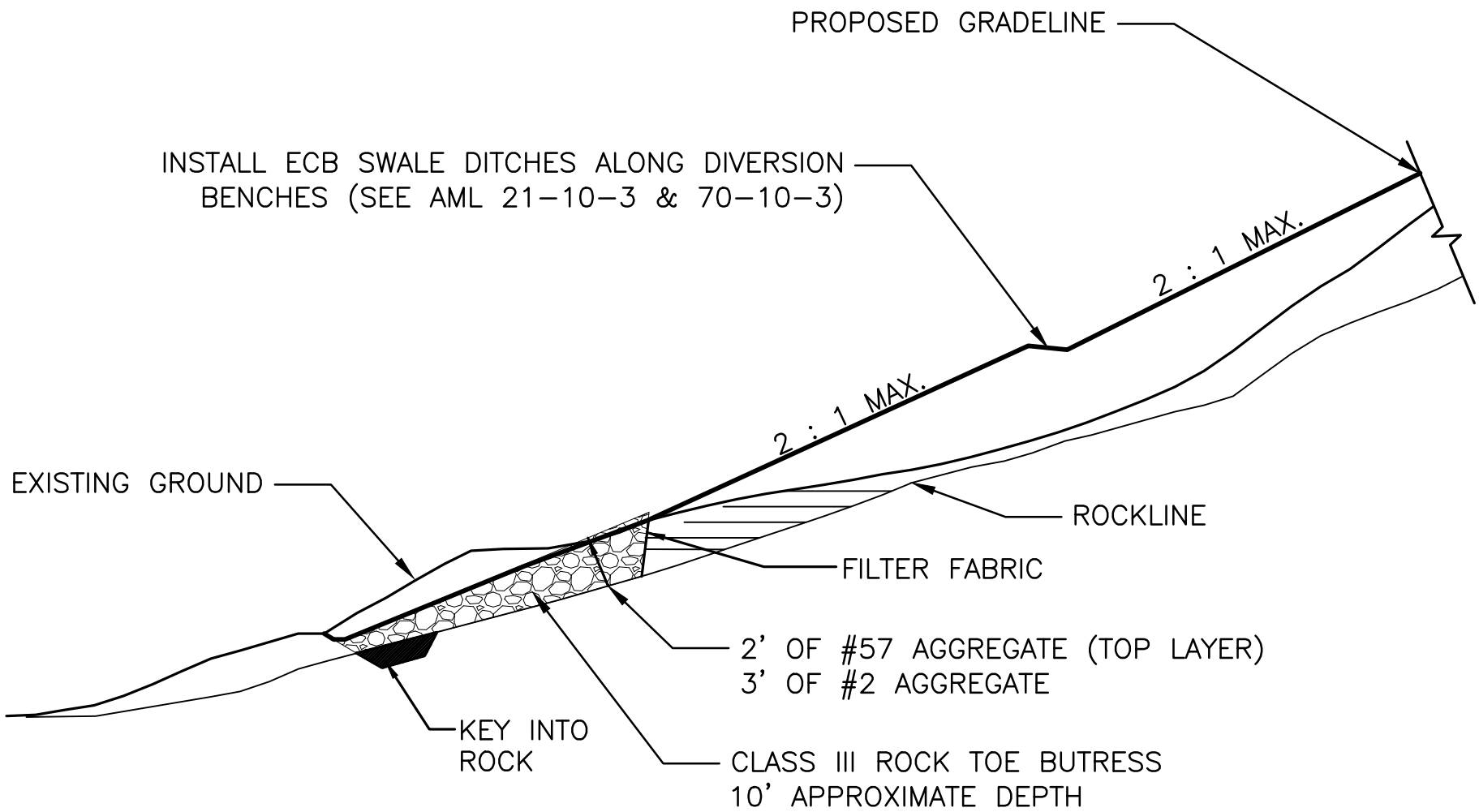

SLOPE RECONSTRUCTION (AML 70-10-2)

KY DAML 7–2017

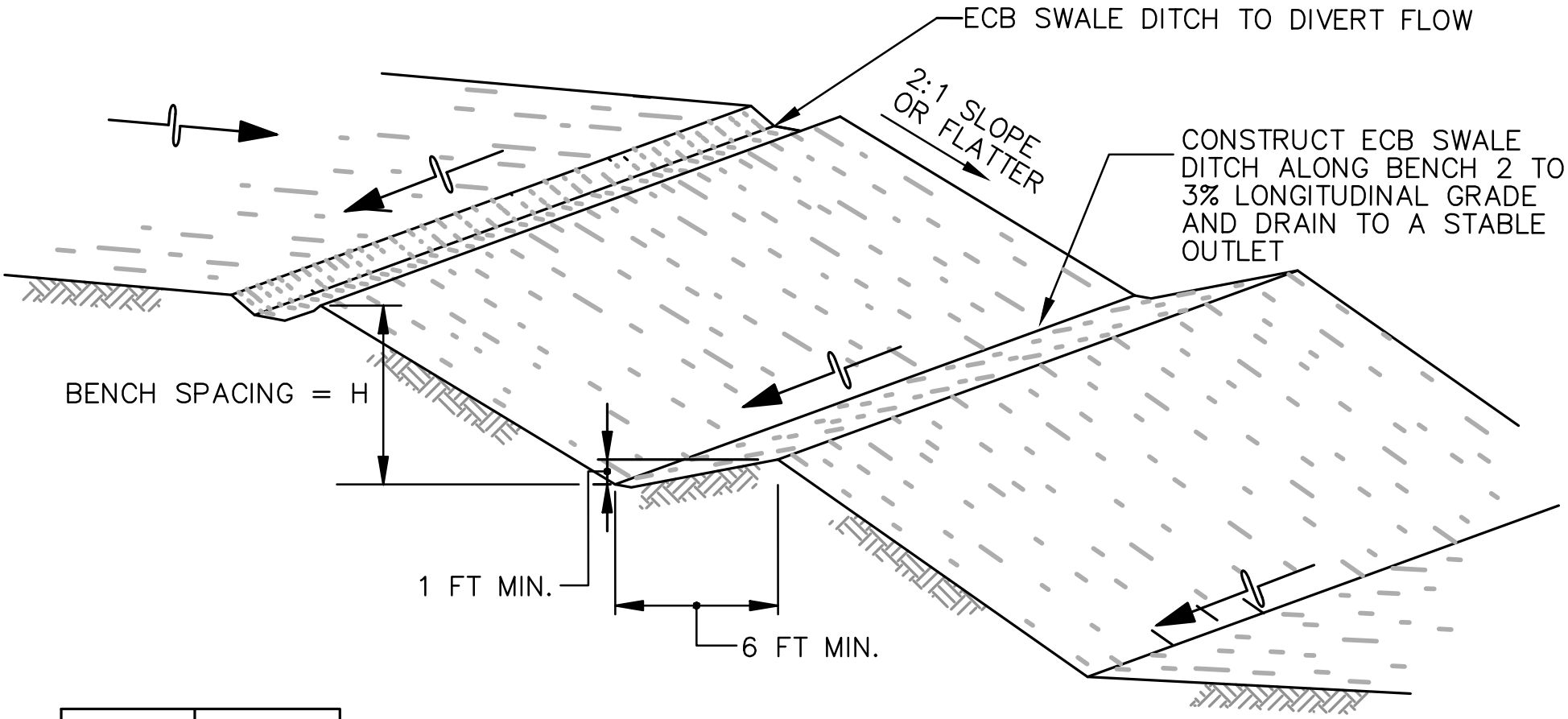

SLOPE	H (MAX.)
2:1	20 FT
3:1	30 FT
4:1	40 FT

BENCHING (AML 70-10-3)

KY DAML 7-2017

NOTE: COVER MATERIAL SHALL BE PLACED AT 2.5' MIN. DEPTH ONCE EARTHWORK–GRADEWORK AND LIME BARRIER HAS BEEN PLACED. SEE CONSTRUCTION NOTES, SPECIAL CONDITIONS, AND AML STANDARD TECHNICAL SPECIFICATIONS FOR FURTHER INSTRUCTIONS AND REQUIREMENTS.

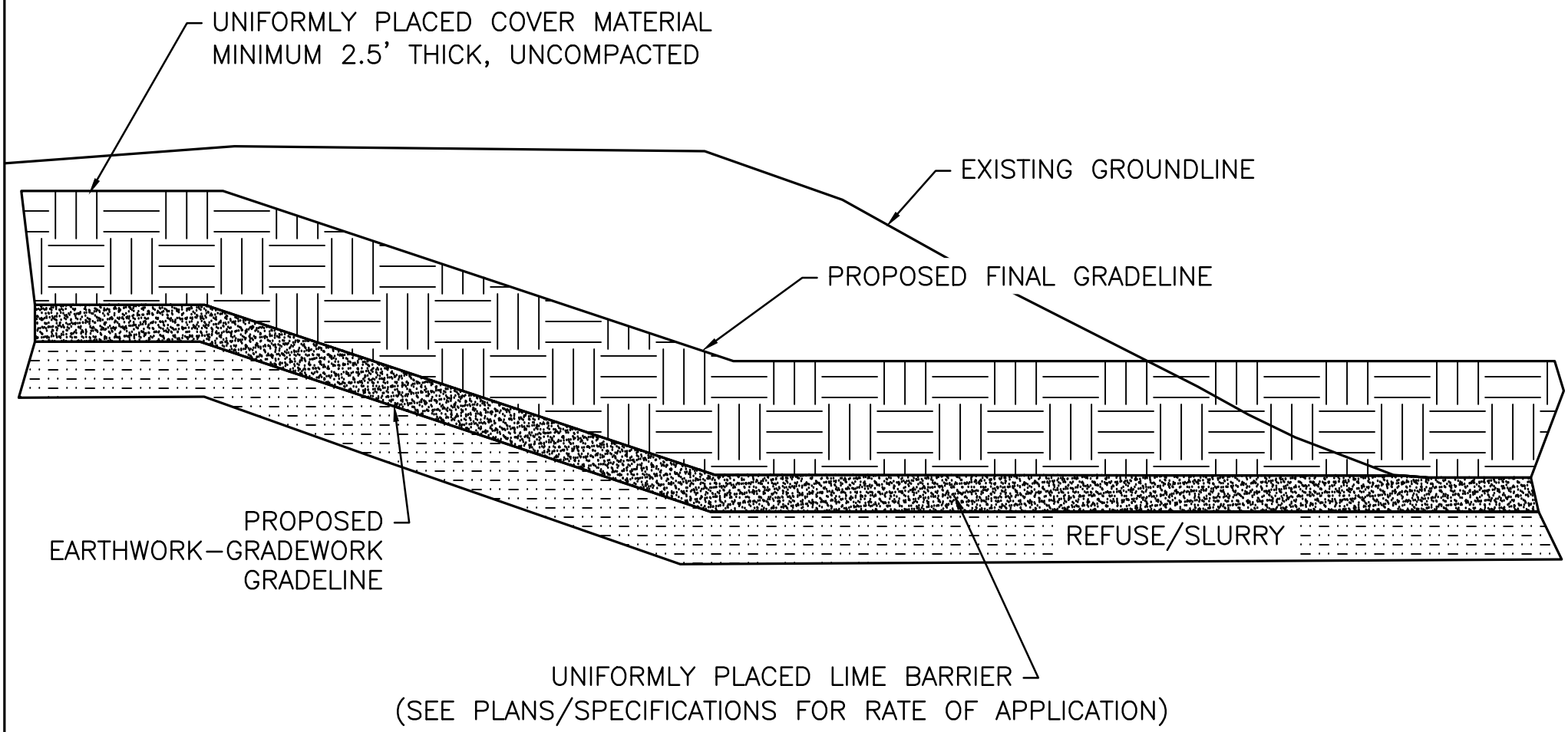

COVER MATERIAL PLACEMENT (AML 70-10-4)

KY DAML 1–2013

TYPE B ECB SLOPE INSTALLATION

* Drawings Not to Scale

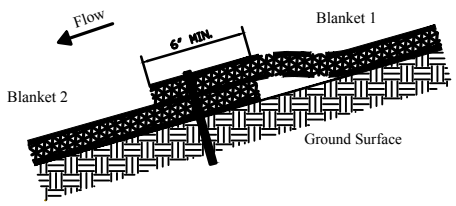

OVERLAP PROFILE

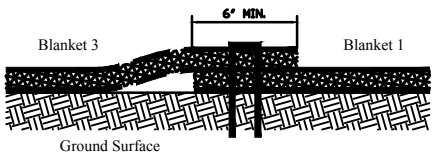

OVERLAP CROSS SECTION

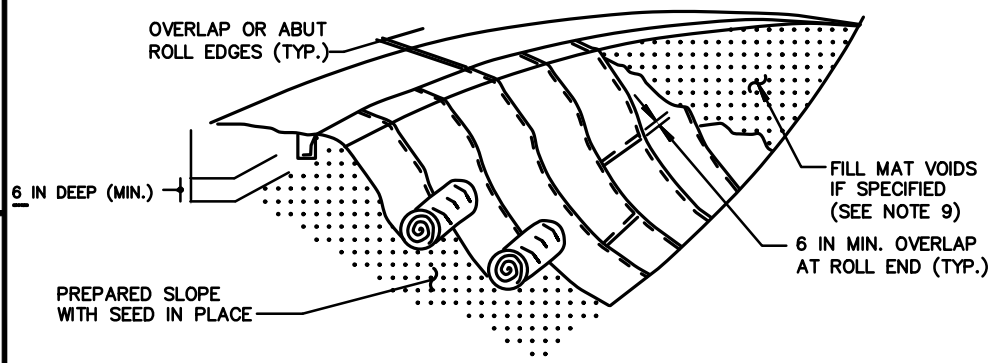

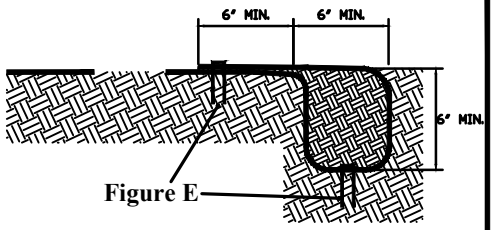

ANCHOR PROFILE

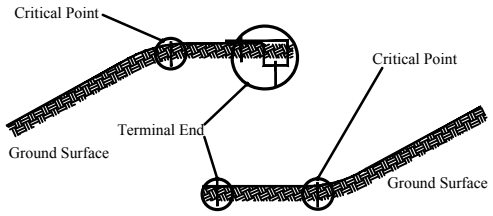

CRITICAL POINT SECURING

STEP 1 - SITE PREPARATION

PREPARE SITE TO DESIGN PROFILE AND GRADE. REMOVE DEBRIS, ROCKS, CLODS, ETC.. GROUND SURFACE SHOULD BE SMOOTH PRIOR TO INSTALLATION TO ENSURE BLANKET REMAINS IN CONTACT WITH SLOPE.

STEP 2 - SEEDING

SEEDING OF SITE SHOULD BE CONDUCTED TO DESIGN REQUIREMENTS OR TO FOLLOW LOCAL OR STATE SEEDING REQUIREMENTS AS NECESSARY.

STEP 3 - STAPLE SELECTION

SECURE BLANKET WITH STEEL STAPLES OR WOODEN STAKES.

STEP 4 - EXCAVATE ANCHOR TRENCH AND SECURE BLANKET

EXCAVATE A TRENCH ALONG THE TOP OF THE SLOPE TO SECURE THE UPSTREAM END OF THE BLANKET. THE TRENCH SHOULD RUN ALONG THE LENGTH OF THE INSTALLATION, BE 6 IN. WIDE AND 6 IN. DEEP MIN. STAPLE BLANKET ALONG BOTTOM OF TRENCH, FILL WITH COMPACTED SOIL, OVERLAP BLANKET TOWARDS TOE OF SLOPE AND SECURE WITH ROW OF STAPLES.

STEP 5 - SECURE BODY OF BLANKET

ROLL BLANKET DOWN SLOPE FROM ANCHOR TRENCH. STAPLE BODY OF BLANKET. LEAVE END OF BLANKET UNSTAPLED. PLACE DOWNSTREAM BLANKET UNDERNEATH UPSTREAM BLANKET TO FORM SHINGLE PATTERN. STAPLE SEAM. SECURE DOWNSTREAM BLANKET. MORE STAPLES MAY BE REQUIRED TO ENSURE BLANKET IS SUFFICIENTLY SECURED TO RESIST MOWERS AND FOOT TRAFFIC AND TO ENSURE BLANKET IS IN CONTACT WITH SOIL SURFACE OVER THE ENTIRE AREA OF BLANKET. FURTHER, CRITICAL POINTS REQUIRE ADDITIONAL STAPLES.

STEP 6 - CONTINUE ALONG SLOPE - COMPLETE INSTALLATION

OVERLAP ADJACENT BLANKETS AND REPEAT STEP 5. SECURE TOE OF SLOPE USING STAPLING PATTERN SHOWN IN FIGURE E. SECURE EDGES OF INSTALLATION BY STAPLING AT 1.0' INTERVALS ALONG THE TERMINAL EDGE.

ACTUAL STABLE SPACING MAY DIFFER BETWEEN THIS DETAIL AND MANUFACTURER DETAILS.

ECB SLOPE INSTALLATION (AML 70-10-5)

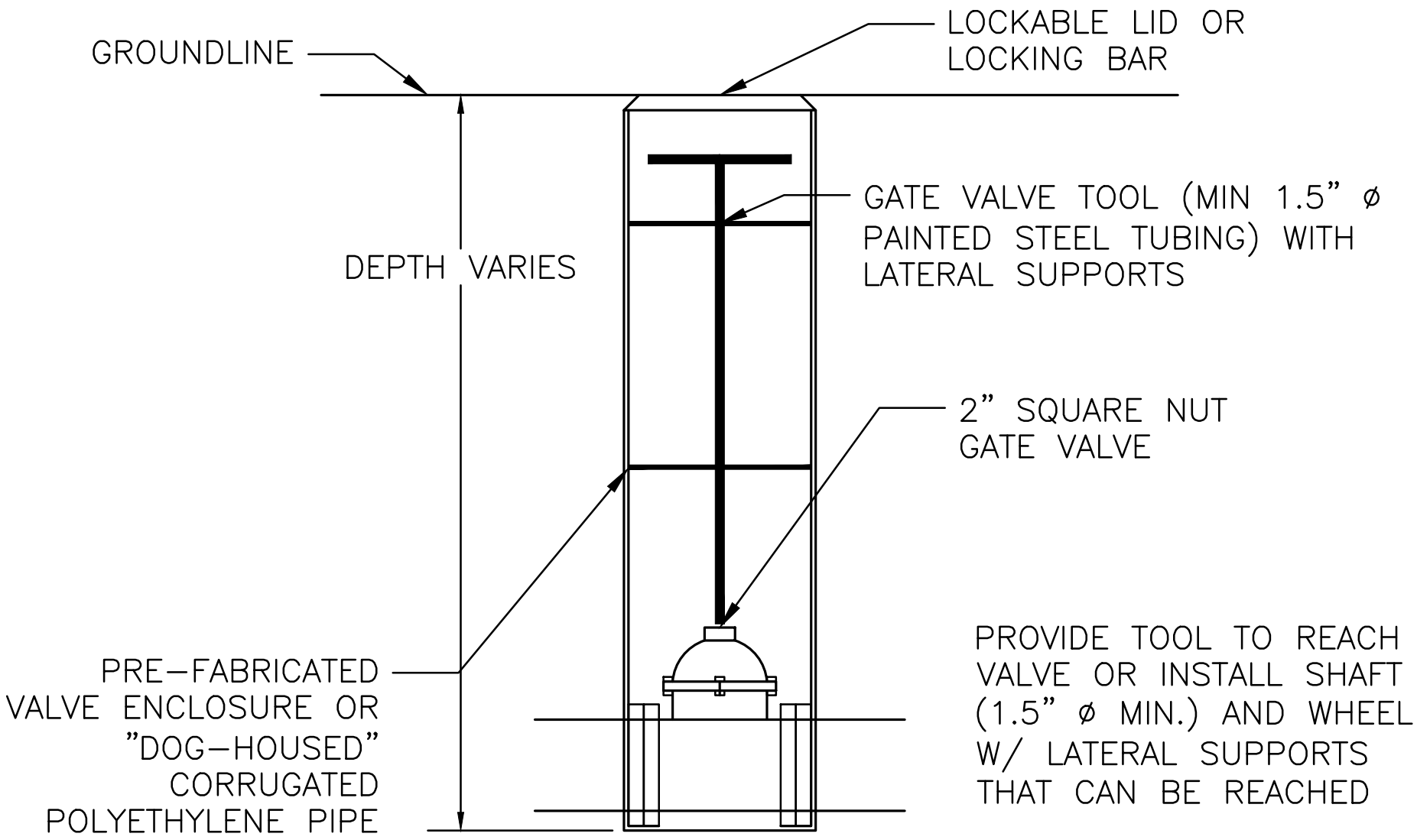

GATE VALVE AND HOUSING (AML 70-20-1)

KY DAML 1-2013

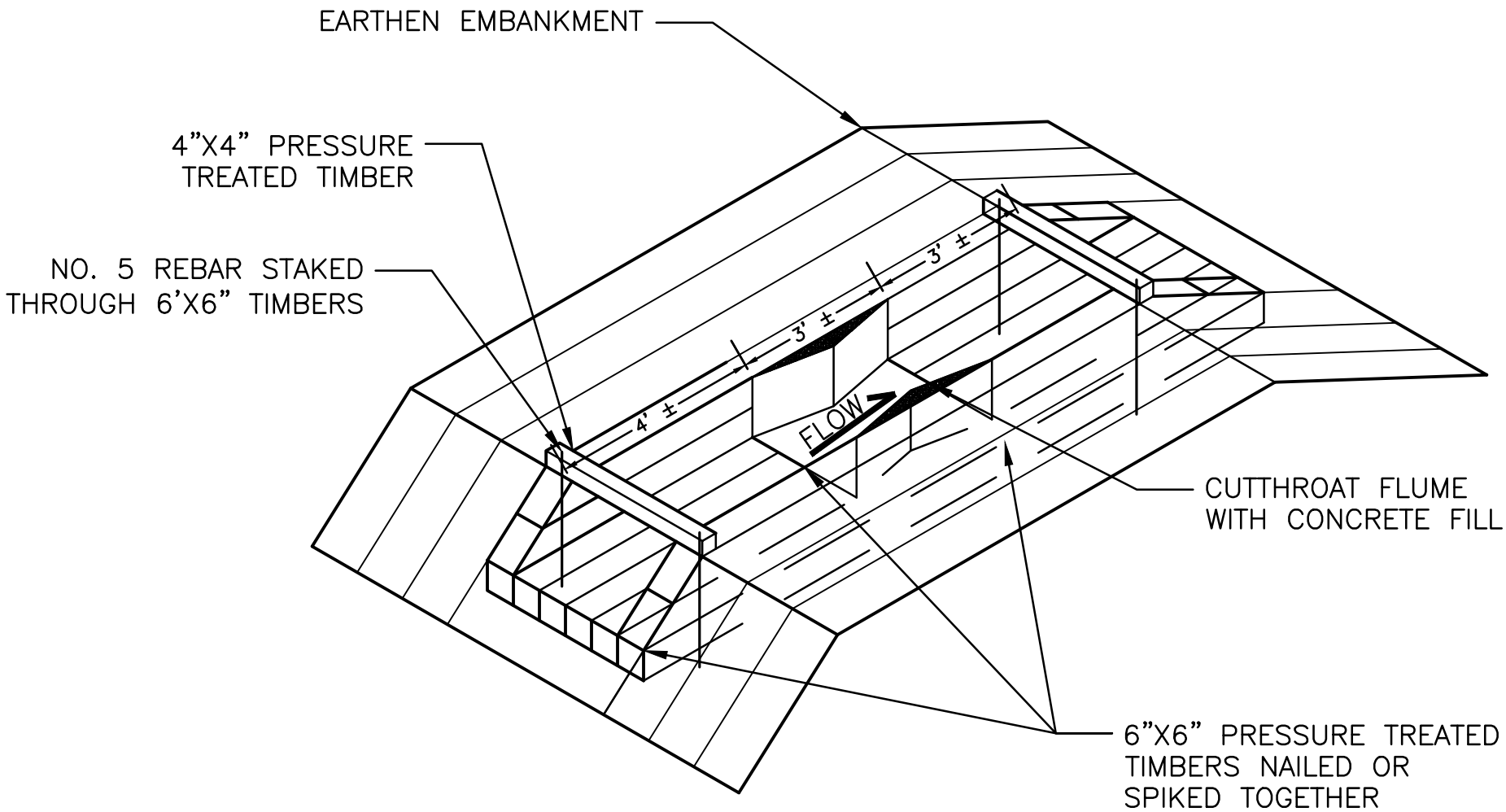

FLUME- TIMBER (AML 70-20-2)

KY DAML 1-2013

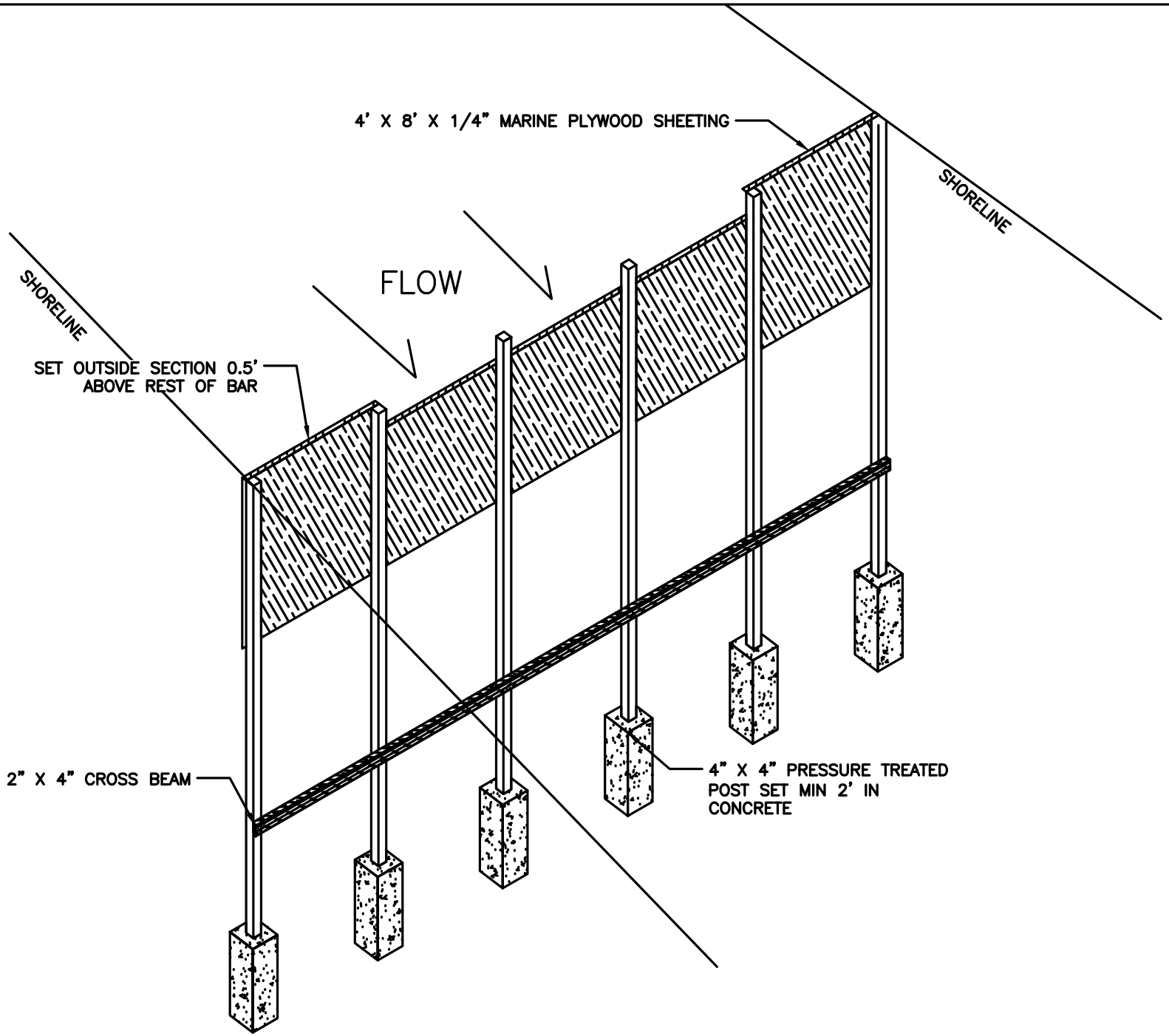

SPREADER BAR BAFFLE (AML 70-20-3)

KY DAML 1–2013

ASSEMBLY

1. LIFT THE SIDES, ENDS, AND DIAPHRAGMS INTO VERTICAL POSITION. (FIG. A.)
2. WIRE THE CORNERS OF THE PANELS AND DIAPHRAGMS TO THE FRONT AND BACK PANELS USING THE GAGE WIRE PROJECTING FROM THE CORNER OF EACH PANEL.
3. LACE ALL VERTICAL EDGES OF END PANELS AND DIAPHRAGMS USING MANUFACTURER'S APPROVED LACING WIRE. LACING SHALL BEGIN BY SECURING THE WIRE AT THE BASKET CORNER BY LOOPING AND TWISTING, THEN PROCEEDING ALONG EDGES BY LOOPING THE WIRE AT APPROXIMATELY 5" INTERVALS ALTERNATING BETWEEN SINGLE AND DOUBLE LOOPS, FINALLY SECURING THE WIRE BY LOOPING AND TWISTING AT THE OPPOSITE CORNER (FIG. C).
4. ALL VERTICAL EDGES SHALL BE SECURED BY LACING WIRE TO ANOTHER VERTICAL EDGE WHEN TOUCHING ANOTHER BASKET.

INSTALLATION

1. THE FOUNDATION SURFACE ON WHICH THE GABIONS ARE TO BE PLACED SHALL BE RELATIVELY SMOOTH AND EVEN.
2. GABIONS SHALL BE PLACED, WHERE POSSIBLE, FRONT TO FRONT AND BACK TO BACK TO EXPEDITE STONE FILLING AND LID LACING OPERATIONS (FIG. B).
3. ADJACENT GABIONS SHALL BE LACED ALONG THE PERIMETER OF ALL CONTACT SURFACES INCLUDING ANY UNDERLYING ROWS OF GABIONS (FIG. B).
4. GABIONS SHALL BE FILLED IN APPROXIMATELY 1' LIFTS. CONNECTING WIRES SHALL BE PLACED IN OUTSIDE CELLS AT ALL EXPOSED FACES AND FIRMLY WIRED (FIGS D AND E).
5. FILLED GABIONS SHALL BE STRETCHED TIGHT DURING THE LACING OPERATION TO LIMIT SHIFTING OF THE GABION STONE AFTER INSTALLATION.
6. ALTERNATIVE GABION UNIT FASTENERS MAY BE USED TO SECURE THE HORIZONTAL EDGES.
7. ADJACENT ROWS OF GABION UNITS SHALL BE PLACED SUCH THAT THE SEAMS ARE OFFSET.

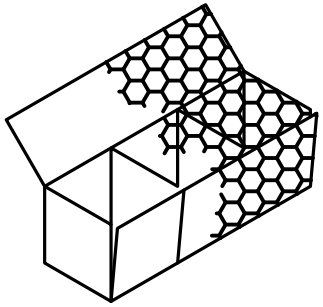

FIG. A

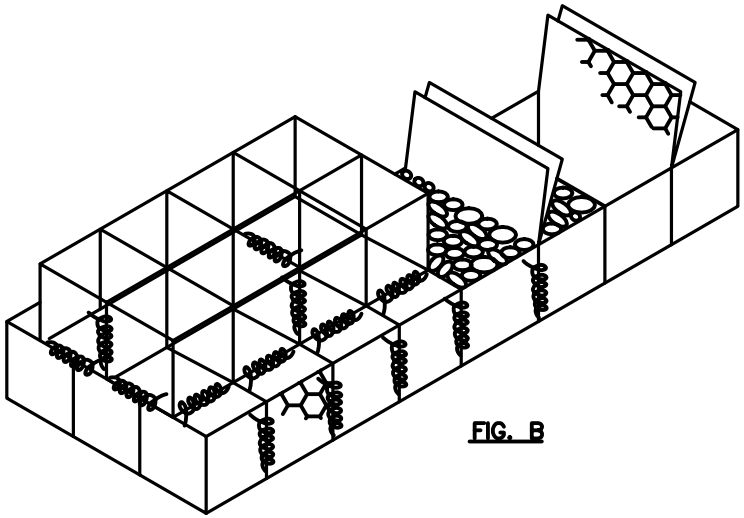

FIG. B

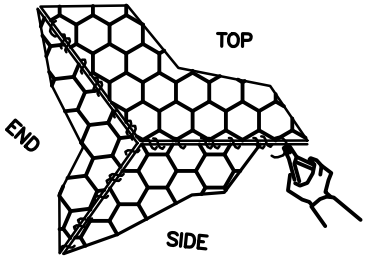

FIG. C

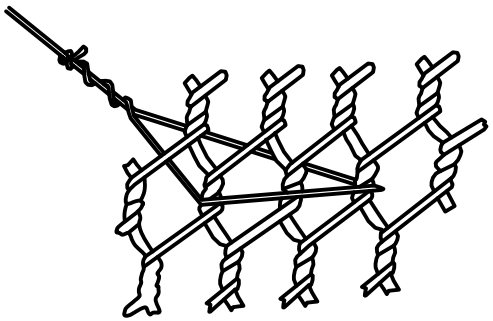

FIG. D

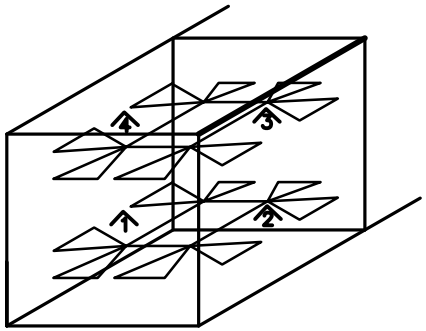

FIG. E

GABION BASKET ASSEMBLY (AML 70-30-1)

KY DAML 1–2013